2009
DESIGN & INSTALLATION GUIDE

WARDFLEX®

June 2009

WARDFLEX®

DESIGN AND INSTALLATION GUIDE

FOR

WARDFLEX®

CORRUGATED STAINLESS STEEL TUBING FUEL GAS* PIPING

***Includes Natural Gas and Propane**

WARD MANUFACTURING LLC.

P.O. BOX 9
BLOSSBURG, PA. 16912
570 638-2131
www.wardflex.com

C US

FM

PHCC

CLASSIFIED UL

THROUGH-PENETRATION PRODUCTS
FOR USE IN THROUGH-PENETRATION FIRESTOP SYSTEMS
SEE UL FIRE RESISTANCE DIRECTORY 9R81

Rev. 9 June 2009 ©Ward Manufacturing, LLC. All Rights Reserved.

Written in accordance with the ANSI Standards for Fuel Gas Piping Systems Using Corrugated Stainless Steel Tubing.
ANSI/AGA LC 1-CSA 6.26 05 "Flexible Gas Tubing for Natural and Propane Piping Systems"

IMPORTANT READ ENTIRE MANUAL

TABLE OF CONTENTS

1.0 Introduction 5
- 1.1 User Warnings 6
- 1.2 Limitations of Manual 6
- 1.3 Listing of Applicable Codes and Standards 6

2.0 Description of System and Components 7
- 2.1 Tubing (All Available Sizes) 7
- 2.1.1 Mechanical Joints 7
- 2.1.2 Female Mechanical Joints 7
- 2.1.3 Couplings 7
- 2.1.4 Mechanical Tees 8
- 2.1.5 Utility Nut With Locknut & Right Angle Mounting Bracket 8
- 2.1.6 Termination Fittings 8
- 2.1.7 Female Termination Fittings 9
- 2.1.8 Flange Termination Assemblies 9
- 2.2 Striker Plates & Stripwound Conduit 9
- 2.3 Pressure Regulators 10
- 2.4 WARDFLEX® Stub Outs 10
- 2.5 Manifolds (Available Sizes) 10
- 2.6 WARDFLEX® Valves 11
  - 2.6.1 WARDFLEX® Right Angle Valve 11
- 2.7 Shut-Off Valves 11
- 2.8 WARDFLEX® Spool 11
- 2.9 Spool Caddy 12
- 2.10 Manifold Bracket 12
- 2.11 Gas Outlet Box 12
- 2.12 Quick Connect 13
- 2.13 Bonding Clamps 13

3.0 System Configuration and Sizing 14
- 3.1 System Configurations 14
  - 3.1.1 Series and Parallel Low Pressure Systems 15
  - 3.1.2 Dual Pressure Systems 16
- 3.2 Sizing Methods and Examples 18
  - 3.2.1 Low Pressure Systems (Longest Length Method) 18
  - 3.2.2 Elevated Pressure Systems 22
  - 3.2.3 Combination Steel/CSST Systems 24
- 3.3 Summation Sizing of WARDFLEX® Systems 25
- 3.4 Sizing Program 27

4.0 Installation Practices 28
- 4.1 General Installation Practices 28
  - 4.1.1 Tools For Installation 29
  - 4.1.2 Minimum Bend Radii 29
  - 4.1.3 Debris Protection 29
- 4.2 Fitting Assembly 30
  - 4.2.1 Tubing Cutting/End Preparation 30
  - 4.2.2 Indoor/Outdoor Termination Fittings 31
- 4.3 Routing 32
  - 4.3.1 Vertical Frame Members 32
  - 4.3.2 Horizontal Frame Members 32
  - 4.3.3 Drilling and Notching 32
  - 4.3.4 Concealed Locations for Fittings 33
  - 4.3.5 Outdoor Issues 34
- 4.4 Protection 35
  - 4.4.1 Striker Plates 35-37
  - 4.4.2 Stripwound Conduit 38
  - 4.4.3 Outdoor Installations 38
  - 4.4.4 Fire Stops 39

4.5 Meter Hook-Ups 40
4.5.1 Special Tubing Termination 40
4.5.2 Direct Connection 40
4.6 Appliance Connections 41
4.6.1 Termination Fittings Appliance Connector 42
4.6.2 Direct Connection 42
4.6.3 Gas Convenience Outlet 43
4.6.4 Special Applications 43
4.6.4.1 Roof Top Units 43
4.6.4.2 Outdoor Appliances 44-45
4.6.4.3 Fireplace Appliances 46-47
4.7 Manifold Stations 48-51
4.8 Pressure Regulators 52
4.8.1 Installation Requirements 52
4.8.2 Vent Limiter Options 54
4.8.3 Regular Venting Requirements 54
4.8.4 Adjustment 54
4.8.5 Over Pressurization Protection 55
4.8.6 Propane Regulators 55
4.9 Underground Installations 55-56
4.9.1 Acceptable Usages 56
4.10 Electrical Bonding/Grounding 56-57
4.11 Manufactured Housing/Installation/Inspection Guidelines 57

5.0 Inspection, Repair and Replacement 59
5.1 Minimum Inspection Requirements (Checklist) 60
5.2 Repair/Replacement of Damaged Tubing 60

6.0 Testing 57
6.1 Pressure Testing and Inspection Procedure 61

7.0 Sizing Tables (Natural and LP) 62
7.1 Natural Gas 63
Table A-1 7-8 in W.C. supply / 3 in W.C. Drop 63
Table A-2 7-8 in W.C. supply / .5 in W.C. Drop 64
Table A-3 14 in W.C. supply / 6 in W.C. Drop 64
Table A-4 2 PSI supply / 1PSI Drop 65
Table A-5 2 PSI supply / 1.5 PSI Drop 65
Table A-6 5 PSI supply / 3.5 PSI Drop 66
Table A-7 1/2 PSI supply / 1 in W.C 66
Table A-14 1/2 PSI supply / 2 in W.C 67
Table A-15 1/2 PSI supply / 1 in W.C 67
7.2 Propane 68
Table A-8 11-13 in supply / .5 in W.C. Drop (LP only) 68
Table A-9 2 PSI supply / 1 PSI Drop (LP only) 68
Table A-10 5 PSI supply / 3.5 PSI Drop (LP only) 69
Table A-11 11-13 in W.C. supply / 3 in W.C. Drop (LP only) 69
Table A-12 14 in W.C. supply / 6 in W.C Drop (LP only) 70
Table A-13 Steel Pipe Capacities 70

8.0 Definitions 71
8.1 Definitions of Terminology in this Guide 71-72

Appendix A 73
Table A-14 Specific Gravity Correction Factors 73
Table A-15 Natural Gas Flow in CFH 74
Table A-16 Propane Flow in CFH 75
Table A-17 Equivalent Lengths Factor for Valves and Fittings 75
Table A-18 Pressure Drop/Ft. Sizing 76-77

Appendix B.. 78-80

ATTENTION!

1. The installation of WARDFLEX® Flexible Gas piping must be performed by a qualified installer who has successfully completed the WARDFLEX® training program. The installer must also meet all qualifications required by the state and/or local administrative authority administering the provisions of the code where the gas piping is installed.
2. WARDFLEX® must be installed only by qualified installers who have passed WARD MANUFACTURING'S training program. WARDFLEX® training may augment but does not supercede any state or local regulations regarding installer certifications.
3. All piping systems using WARDFLEX® shall be designed and installed according to the requirements of this guide.
4. Only WARDFLEX® components may be used in the system. Components from other systems are not interchangeable. Only components supplied or specified by WARD shall be used.
5. Installation shall be in accordance with local codes, or in their absence, in accordance with the National Fuel Gas Code ANSI Z223.1 in the USA, and CAN/CGA - B149.1 & B149.2 in Canada. In cases where the requirements of this guide are in conflict with the local code, the local code must take precedence, unless the local authority having jurisdiction approves a variance, or change.
6. Inspection, testing, and purging shall be performed according to the procedures in Part 4 of the National Fuel Gas Code, ANSI Z223.1, and/or - B149 installation Codes or in accordance with local codes.
7. This system and related components shall be used only in gas piping systems where the operating gas pressure does not exceed 25 psig.
8. Tubing with covering may be installed in or routed through air plenums, ducts, or other areas which may be limited by building codes to materials having maximum ASTM E84 ratings of 25 Flame Spread and 50 Smoke Density.
   Other procedures are t to be followed by the installer to meet local building codes with respect to Flame Spread and Smoke Density regulations for nonmetallic materials.
9. Tubing may be routed through concrete floors or walls, provided it is passed through previously embedded conduit. Tubing shall not be buried directly underground.
10. The CSST is typically routed:
    - Beneath, through and alongside floor joists
    - Inside interior wall cavities
    - On top of ceiling joists in attic space.
11. Carefully unwind and route the tubing from the reel to the required location, making certain not to kink, tangle or apply excessive force.
12. Tubing end must be temporarily capped or taped closed prior to installation to prevent contamination from foreign material.
13. When installing WARDFLEX® avoid sharp bends, stretching, kinking, twisting, or contacting sharp objects. The tubing shall be replaced if damage occurs.

IMPORTANT - READ ENTIRE MANUAL

This document is the sole property of WARD MANUFACTURING, LLC.
It shall not be copied or reproduced without the prior permission of WARD MANUFACTURING, LLC.

1.1 USER WARNINGS(see section 1.8 of ANSI LC 1-CSA 6.26-2005)

The use of fuel gas can be dangerous. Special attention must be given to the proper design, installation, testing and application of the gas piping system. Sound engineering practices and principles must be exercised, as well as diligent adherence to the proper installation procedures to insure the safe operation of the piping system. All installed systems must pass customary installation inspections by the local building official having authority prior to being placed into service.

This document is intended to provide the user with general guidance when designing and installing a WARDFLEX® corrugated stainless steel tubing (WARDFLEX®) gas system. Its use with any other gas tubing system is inappropriate and may result in serious bodily injury and property damage. Where local gas or building codes impose greater requirements than this document, you should adhere to the local code requirements. Performance of accessory devices, such as pressure regulators and shut off valves, should be reconfirmed by contacting the accessory device manufacturer and receiving the latest technical data on sizing, installation and performance.

Improper installation methods or procedures could lead to accidents such as explosions, fires, gas poisoning, asphyxiation, etc. This system shall be installed with strict adherence to this guide as well as local building codes. All installed systems must pass installation inspections by the authorized local building official prior to being placed in service. Ward Manufacturing, LLC shall have no responsibility for any misinterpretation of the information contained in this guide or any improper installation or repair work or other deviation from procedures recommended in this manual, whether pursuant to local building codes or engineering specifications or otherwise.

Only those components designed and made for or specified for use in this system shall be used in its installation. WARDFLEX® components and tubing shall not be used with other corrugated stainless steel tubing system components from other manufacturers.

WARDFLEX® shall be used only in gas piping systems where the operating gas pressure does not exceed 25 PSI. Accessories for systems shall be rated for the operating gas pressure used. Thus, for example, accessories for 25 PSI systems shall be rated for 25 PSI service. Performance of accessory devices, such as pressure regulators and shut-off valves should be reconfirmed by contacting the accessory device manufacturer and receiving the latest technical data on sizing, installation and performance.

Certain chemicals are corrosive to WARDFLEX®. See Section 4.1 of the current manual for more specific information on this topic.

A gas delivery system consisting of WARDFLEX® offers significant advantages over other gas delivery systems because of its wall dimensions and corrugated design. In contrast to rigid steel pipe, WARDFLEX® does not require intermediate joints in most installations because the tubing is capable of being installed in one continuous run, reducing not only the total number of joints, but also the potential for leaks at joints. WARDFLEX®'s flexibility also affords more installation options because an installer can avoid existing obstacles, and it eliminates the repetitive measuring, cutting, threading and joint assembly that are common with installation of rigid steel piping systems. WARDFLEX®'s flexibility offers even further safety advantages in geographic areas that are prone to seismic activity because the tubing provides greater flexibility to withstand certain movement of the ground or structural shifts.

Although WARDFLEX® provides significant advantages over more rigid gas delivery systems, its wall dimensions may make it more likely than steel pipe to be punctured by a nail or other sharp objects, or damaged by other extraordinary forces such as a lightning strike, depending on the circumstances. It is well known that lightning is a highly destructive force. Therefore, the user must ensure that the system is properly bonded and grounded. In order to maximize protection of the entire structure from lightning damage, the user should consider installation of a lightning protection system per NFPA 780 and other standards, particularly in areas prone to lightning. Note that lightning protection systems as set forth in NFPA 780 and/or other standards go beyond the scope of this manual. Users of WARDFLEX® should consider all of the limitations and benefits of WARDFLEX® for their particular situation. Installers shall provide building owners and electricians with the required WARDFLEX® Information Card discussing these limitations and benefits.

1.2 LIMITATIONS OF MANUAL

This document is intended to aid the user in the design, installation and testing of WARDFLEX® Corrugated Stainless Steel Tubing (WARDFLEX®) to distribute fuel gas in residential housing units and commercial structures. It would be impossible for this guideline to anticipate and cover every possible variation in housing configurations and construction styles, appliance loads and local restrictions. Therefore, there may be applications which are not covered in this guide. For applications beyond the scope of this guide, contact Ward Manufacturing's Engineering Department. The techniques included within this guide are recommended practice for generic applications. These practices must be reviewed for compliance with all applicable local fuel gas and building codes. Accordingly, where local gas or building codes impose greater requirements than this manual, you should adhere to the local code requirements. This system and related components should be used only as fuel gas piping where the operating gas pressure does not exceed 25 PSI.

In CANADA the installation of CSA-CGA certified WARDFLEX® flexible gas tubing for natural and propane gas piping systems must be in accordance with the applicable sections of the current CAN/CGA-B 149.1 or .2 installation codes, and the requirements or codes of the local utility or other authority having jurisdiction. All gas components used in conjunction with the gas tubing must be certified for use in Canada.

1.3 LISTING OF APPLICABLE CODES & STANDARDS (See www.wardflex.com for More Information)

Standards

- United States - ANSI/AGA LC-1
- Canada - CAN/CGA 6.26 M

Listings

- CSA. - Canadian Standard Association
- IAPMO - International Association of Plumbing and Mechanical Officials - File Number 3353
- UL - Classified Mark File #R18357
- ICC - International Codes Council ESR-1879
- FM - Factory Mutual 3011939

Code Compliance

- BOCA - National Mechanical Code
- ANSI/CABO 2.0 - One and Two Family Dwelling Code
- ICC - International Mechanical Code
- NFPA 54- National Fuel Gas Code
- NFPA 58- Standard for the Storage and Handling of Liquified Petroleum Gasses
- SBCCI - Southern Building Code Congress International
- UMC - Uniform Mechanical Code
- C/UPC TM - California/Uniform Plumbing Code
- Canada Natural Gas and Propane Codes B149.1 and B149.2

IMPORTANT - READ ENTIRE MANUAL

This document is the sole property of WARD MANUFACTURING, LLC. It shall not be copied or reproduced without the prior permission of WARD MANUFACTURING, LLC.

2.1 CORRUGATED STAINLESS STEEL TUBING

USE:
Corrugated Stainless Steel Tubing Conveys Gas

MATERIALS:
Tubing Stainless Steel
Covering Polyethylene

SHAPE & DIMENSIONS

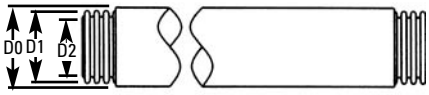

Custom Lengths Available Upon Request.

TUBING Size	10A 3/8″	15A 1/2″	20A 3/4″	25A 1″	32A 1-1/4″	38A 1-1/2″	50A 2″
EHD	15	19	25	30	37	48	62
Inner Dia. (D2) inches	.452	.591	.787	.984	1.26	1.59	2.12
Outside Dia. (D1) inches	.559	.724	.980	1.213	1.528	2.02	2.55
Tubing Thickness	REF .008	REF .008	REF .010	REF .010	REF .010	REF .012	REF .012
O.D. w/ Covering (D0) inches	REF .606	REF .772	REF 1.028	REF 1.260	REF 1.575	REF 2.06	REF 2.59
Length of Tubing (Ft.)	50,100 250,500 1,000	50,100 250,500 1,000	50,100 180,250 500	50,100 180,250 250	50,100 250	50,100 150	50,100 150

2.1.1 MECHANICAL JOINTS

USE:
Mechanical Joint Fittings Connect the Corrugated Stainless Steel Tubing to a Manifold or Gas Outlet

MATERIALS:
Body: Brass
Nut: Brass
Retainer: Brass
Gasket: Composite Fiber

SHAPE & DIMENSIONS

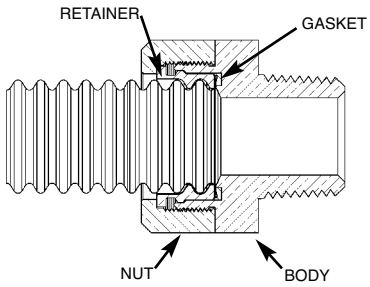

FITTING Size	10M 3/8″	15M 1/2″	20M 3/4″	25M 1″	32M 1-1/4″	38M 1-1/2″	50M 2″
TAPER THREAD (NPT)	1/2″ or 3/8″	1/2″ or 3/8″	1/2″ 3/4″ or 1″	3/4″ or	1-1/4″	1-1/2″	2″

2.1.2 FEMALE MECHANICAL JOINTS

USE:
Female Mechanical Joint Join Corrugated Stainless Steel Tubing to Pipe Thread of the Same Size

MATERIALS:
Body: Brass
Nut: Brass
Retainer: Brass
Gasket: Composite Fiber

SHAPE & DIMENSIONS

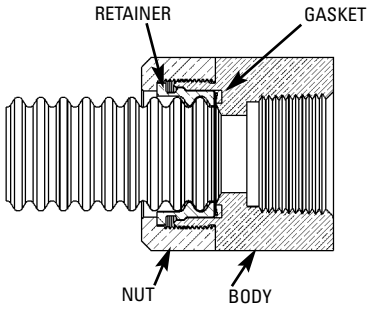

FITTING Size	10M 3/8″	15M 1/2″	20M 3/4″	25M 1″
TAPER THREAD (NPT)	1/2″	1/2″ or 3/8″	1/2″ or 3/4″	3/4″ or 1″

2.1.3 COUPLINGS

USE:
Mechanical Couplings Join Two Corrugated Stainless Steel Tubings of the Same Size

MATERIALS:
Body: Brass
Nut: Brass
Retainer: Brass
Gasket: Composite Fiber

SHAPE & DIMENSIONS

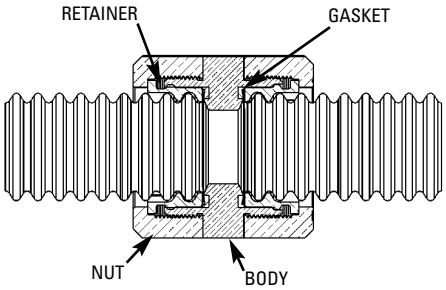

FITTING Size	10M 3/8″	15M 1/2″	20M 3/4″	25M 1″	32M 1-1/4″	38M 1-1/2″	50M 2″
TAPER THREAD (NPT)	3/8″	1/2″	3/4″	1″	1-1/4″	1-1/2″	2″

2.1.4 MECHANICAL TEES

USE:

Mechanical Tees Join Three Corrugated Stainless Steel Tubings of Variable Sizes

MATERIALS:

Body: Brass or Malleable Iron
Nut: Brass
Retainer: Brass
Gasket: Composite Fiber

SHAPE & DIMENSIONS

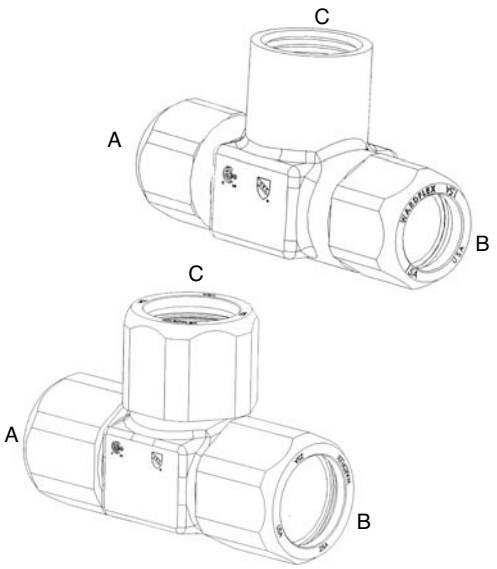

SIZE	A	B	C
15M.WFT	1/2″	1/2″	1/2″
15MX10X.WFT	1/2″	1/2″	3/8″
15MX10MX10M.WFT	1/2″	3/8″	3/8″
15MXC.WFFT	1/2″	1/2″	3/8″NPT
15MXD.WFFT	1/2″	1/2″	1/2″NPT
15MXE.WFFT	1/2″	1/2″	3/4″NPT
20M.WFT	3/4″	3/4″	3/4″
20MX15M.WFT	3/4″	3/4″	1/2″
20MX15MX15.WFT	3/4″	1/2″	1/2″
20MX15MXD.WFFT	3/4″	3/4″	1/2″NPT
20MXD.WFFT	3/4″	3/4″	1/2″NPT
20MXE.WFFT	3/4″	3/4″	3/4″NPT
25M.WFT	1″	1″	1″
25MX20M.WFT	1″	1″	3/4″
25MX20MX20M.WFT	1″	3/4″	3/4″
25MX15M.WFT	1″	1″	1/2″
25MX1.WFFT	1″	1″	1″NPT
25MXE.WFFT	1″	1″	3/4″NPT
32M.WFT	1-1/4″	1-1/4″	1-1/4″
32MX1B.WFFT	1-1/4″	1-1/4″	1-1/4″NPT
38M.WFT	1-1/2″	1-1/2″	1-1/2″
38MX1D.WFFT	1-1/2″	1-1/2″	1-1/2″NPT
50M.WFT	2″	2″	2″
50MX2.WFFT	2″	2″	2″NPT

2.1.5 ADAPTER NUT ASSEMBLY AND RIGHT ANGLE MOUNTING BRACKET

USE:

Utility Nuts Enable Mounting a Connection in or on a Sheet Metal Wall or to Extend the Fitting from the Wall

MATERIALS:

Nut: Brass
Retainer: Brass
Gasket: Composite Fiber
Bracket: Steel
Locknut: Steel

SHAPE & DIMENSIONS

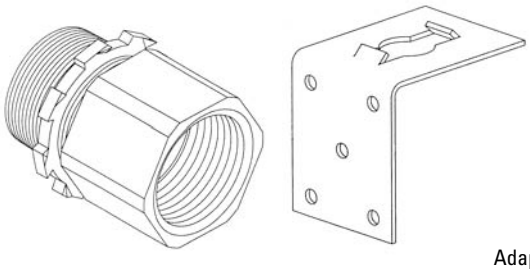

ADAPTER NUT ASSEMBLY	BRACKET SIZE
10M (3/8″) X 3/4″ NPT	10A/15A (38″ 1/2″)
25M (1/2″) X 3/4″ NPT	20A (3/4″)
20M (3/4″) X 1″ NPT	25M 1″

Adapter Nut Assembly and Mounting Bracket Sold Separately.

2.1.6 TERMINATION FITTING

USE:

Termination Fittings Terminate Gas Piping at Gas Equipment

MATERIALS:

Body: Brass
Nut: Brass
Retainer: Brass
Gasket: Composite Fiber
O-Ring: EPDM Rubber
Nut: Malleable Iron

SHAPE & DIMENSIONS

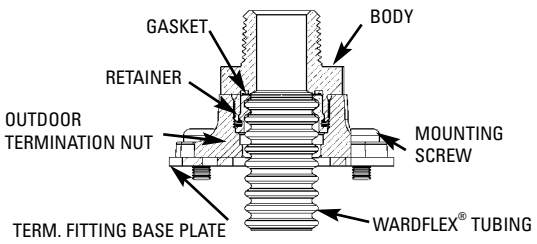

INDOOR

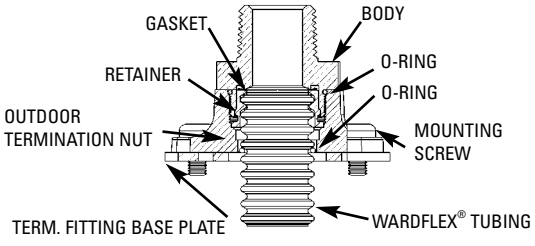

OUTDOOR

FITTING Size	10M X D	15M X D	20M X E	25M X E	25M X 1
TAPER THREAD (NPT)	1/2″	1/2″	3/4″	3/4″	1

2.1.7 FEMALE TERMINATION FITTING

USE:

Termination Fittings
Terminate Gas Piping
at Gas Equipment

MATERIALS:

Body: Brass
Nut: Malleable Iron
Retainer: Brass
Gasket: Composite Fiber
O-Ring: EPDM Rubber
Plate: Steel

SIZE	
10M	15M X C
20M X D	25M

SHAPE & DIMENSIONS

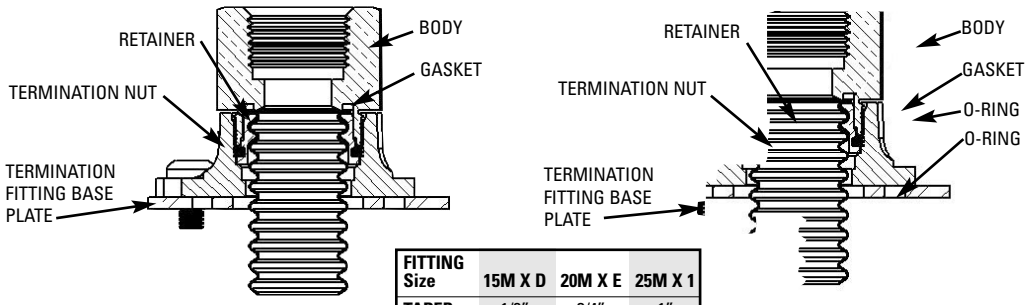

FITTING Size	15M X D	20M X E	25M X 1
TAPER THREAD (NPT)	1/2″	3/4″	1″

2.1.8 FLANGE TERMINATION ASSEMBLIES

USE:

Termination Fittings
Terminate Gas Piping
at Gas Equipment

MATERIALS:

Body: Brass
Nut: Malleable Iron
Retainer: Brass
Gasket: Composite Fiber
O-Ring: EPDM Rubber
Plate: Steel

SHAPE & DIMENSIONS

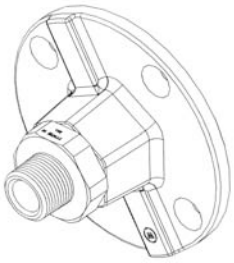

FITTING Size	10M 3/8″	15M 1/2″	20M 3/4″	25M 1″	32M 1-1/4″	38M 1-1/2″	50M 2″
TAPER THREAD (NPT)	3/8″	1/2″	3/4″	1″	1 1/4″	1 1/2″	2″

Available For Indoor And Outdoor Applications.

2.2 STRIKER PLATES AND STRIPWOUND CONDUIT

USE:

Striker Plates Protect the Tubing from Puncture at the Area of Support

MATERIAL:

Case Hardened Steel

SHAPE & DIMENSIONS

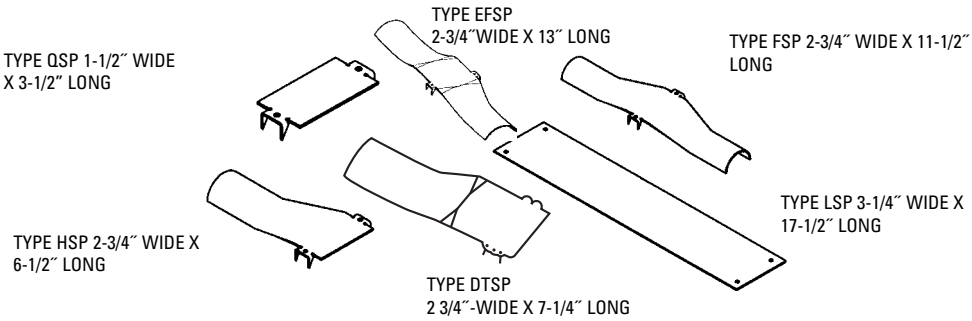

USE:

Stripwound Metal Conduit Protects the Tubing from Puncture Along Tubing Runs

MATERIAL:

Galvanized Steel

SHAPE & DIMENSIONS

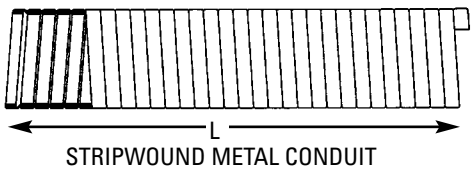

L = 1 ft.
or
L = 50 ft.

2.3 PRESSURE REGULATOR

USE:

Used to Reduce Line Pressure

MATERIALS:

Body: Aluminum

SHAPE & DIMENSIONS

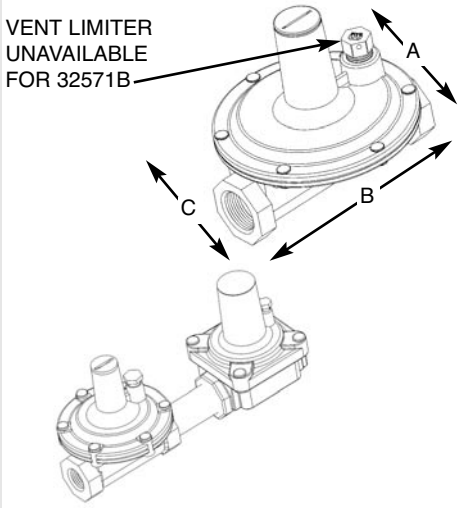

ITEM	Height (in) A	Length (in) B	Width (in) C	Preset for Gas Type	Preset Outlet Pressure
325 3D	3.5	4.3	3.9	Natural	8" W.C.
325 5E	5.3	5.9	5.5	Natural	8" W.C.
325 71B**	7.3	8.0	7.0	Natural	8" W.C.
325 3D OP	3.5	7.9	3.9	Natural	8" W.C.
325 5E OP	5.5	10.4	5.5	Natural	8" W.C.
325 3DLP	3.5	4.3	3.9	LP	11" W.C.
325 5ELP	5.3	5.9	5.5	LP	11" W.C.

MODEL 325 3D, 325 3D OP, AND 3D LP
Port Size: 1/2˝ X 1/2˝ NPT
Vent Size: 1/8˝ NPT
MODEL 325 5E, 325 5E OP, AND 325 5E LP
Port Size: 3/4˝ X 3/4˝ NPT
Vent Size: 3/8˝ NPT
MODEL 325 71B
Port Size: 1 1/4˝ X1 1/4˝ NPT
Vent Size: 1/2˝ NPT
**Vent limiter unavailable for 325 71B regulators
See section 4.8 for operation specifications.

2.4 WARDFLEX® STUB OUTS

USE:

Used to Terminate Gas Piping at Appliance or Meter

MATERIALS:

Body: Steel

SHAPE & DIMENSIONS

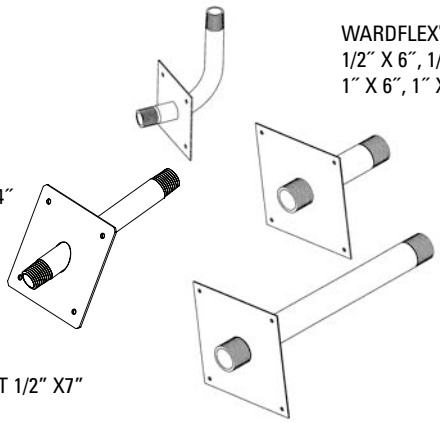

2.5 MANIFOLDS (AVAILABLE SIZES)

USE:

Multiport Gas Distribution Manifolds Supply Multiple Gas Appliances in Parallel Arrangement from Main Distribution Point.

MATERIALS:

Body: Malleable Iron

SHAPE & DIMENSIONS

3 PORT MANIFOLDS

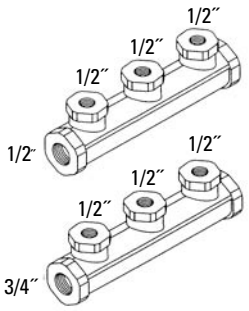

4 PORT MANIFOLDS

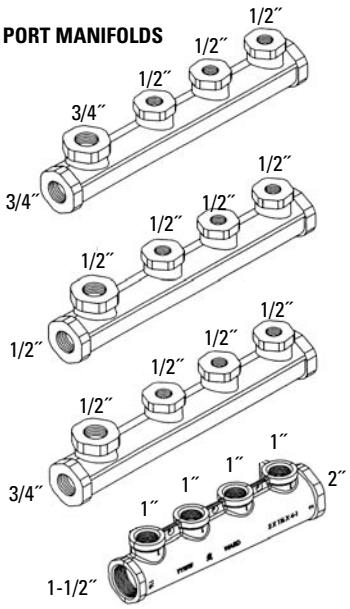

CROSS MANIFOLDS

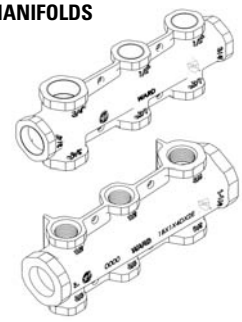

INLETS:	OUTLETS:
1/2˝ X 1/2˝	(6) 1/2˝
3/4" X 3/4"	(4) 1/2" and (2) 3/4˝
1˝ X 3/4˝	(4) 1/2˝ and (2) 3/4˝
1-1/4˝ X 1˝	(4) 1/2˝ and (2) 3/4˝
2˝ X 1-1/2˝	(4) 1˝

2.6 WARDFLEX® VALVE

USE:
Wardflex®® Valve Join Corrugated Stainless Steel Tubing to NPT Connection

MATERIALS:
Body: Brass
Nut: Brass
Retainer: Brass
Gasket: Composite Fiber

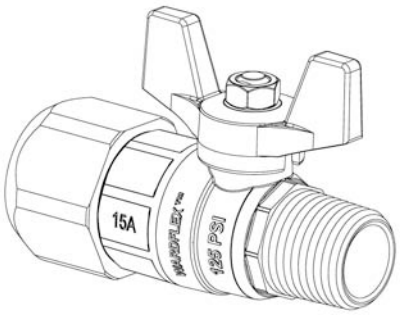

SHAPE & DIMENSIONS

FITTING Size	10M 3/8″	15M 1/2″	20M 3/4″	25M 1″
TAPER THREAD (NPT)	1/2″	1/2″	3/4″	3/4″

2.6.1 WARDFLEX® RIGHT ANGLE VALVE

USE:
Wardflex®® Right Angle Valve Join Corrugated Stainless Steel Tubing to NPT Connection

MATERIALS:
Body: Brass
Nut: Brass
Retainer: Brass
Gasket: Composite Fiber

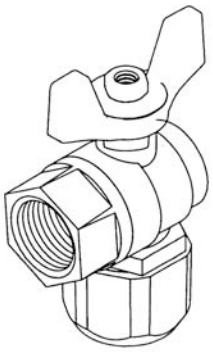

SHAPE & DIMENSIONS

15M X D. WF 90V
20M X D. WF 90V
15M SIZE-110 CFH MAXIMUM
20M SIZE-125 CFH MAXIMUM
CERTIFIED TO ANSI B16.33
ALTERNATELY CAN BE USED WITH ADAPTER NUTS AND FLANGE
TERMINATION NUTS

2.7 SHUT-OFF VALVES

USE:
Ball Valves Shut Off the Flow of Gas at the Appliance Connection and Before the Pound-To-Inches Pressure Regulator

MATERIALS:
Brass

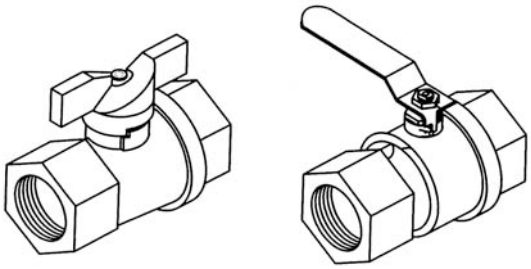

2.8 WARDFLEX® SPOOL

USE AND MATERIALS:
Reusable Tubing Reel

MATERIALS:
Polypropylene

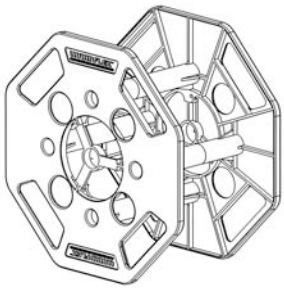

2.9 SPOOL CADDY

USE AND MATERIALS:
Steel Tubing
Reusable Tubing Reel Holder

MATERIAL:
Steel Tubing

2.10 MANIFOLD BRACKET

USE AND MATERIALS:
Steel Mounting of Wardflex® Manifold

MATERIAL:
Steel

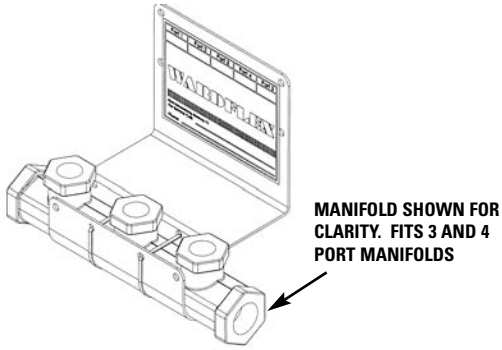

2.11 GAS OUTLET BOX

USE AND MATERIALS:
Box Plastic Valve Brass ASTM B16. 33
Used To Connect Gas Tubing To Appliances
110 CFH Max. 15M 125 CFH Max. 20M

MATERIAL:
Box: Plastic
Valve Brass

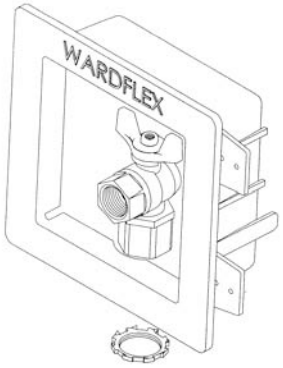

15M X D. WFFM KIT
20M X D. WFFM KIT

2.12 QUICK CONNECTS

USE AND MATERIALS:
Provides a quick disconnect point for appliances such as gas grills.
Material:
Box: Plastic
Valve: Brass

UL 467 Approved

QUICK CONNECT SURFACE MOUNT KIT INCLUDES SHUT OFF OUTLET

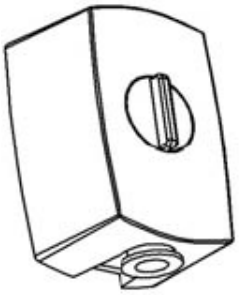

QUICK CONNECT SHUT OFF OUTLET

2.13 BONDING CLAMPS

USE AND MATERIALS:
Bonding clamp used to connect a bonding jumper to a piece of rigid pipe in WARDFLEX® gas piping system.
Material: Bronze

UL 467 Approved

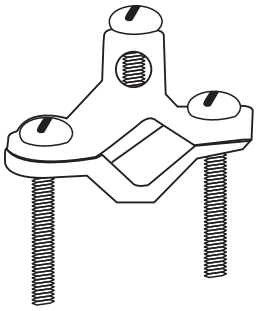

1.WFBC
—3/8″ thru 1″

2.WFBC
—1-1/4″ thru 2″

3.0 SYSTEM CONFIGURATION AND SIZING

The WARDFLEX® system has the following hardware and design differences from conventional gas piping systems using rigid steel pipe:

- The system uses flexible annular corrugated tubing made of 304 stainless steel.
- The tubing is connected using special mechanical fittings.
- In many applications, the tubing is sized for individual gas appliance loads and is therefore usually small in diameter. The tubing is often piped in parallel from a central distribution manifold rather than in series, as is common with steel pipe systems.
- The tubing can be installed in low pressure systems when adding a gas appliance to an existing steel pipe system.
- CSST can be used for pressures up to 25 PSIG.
- Different handling and installation procedures are required with CSST.
- The "elevated pressure" system approach requires the use of higher system pressure and pressure drop than is customary in low pressure systems.
- The elevated pressure system uses a distribution arrangement consisting of a shut-off valve, pressure regulator and multiport manifold.

WARDFLEX® may be used like steel pipe in low pressure gas piping systems (7 in. WC). However, an elevated pressure system will allow the use of smaller tubing sizes. An elevated pressure system typically operates at 2-5 PSIG gas from the meter regulator to an intermediate line regulator/central distribution manifold. At that point, the pressure is reduced to a lower pressure (e.g. 8 in. WC). Independent tubing runs operated at low pressure connect each appliance to the distribution manifold.

Using Figure 3.1 as a guide, the system can be described as follows:

- Gas is delivered to the housing unit or building at street pressure which is then reduced at the service regulator.
- The entire gas load is piped through a single line to a centrally located distribution manifold. At this point the pressure is reduced to approximately 8 in. WC. The gas is then redistributed to each individual appliance (or small group of appliances) through independent CSST lines.
- The tubing is then connected to each appliance according to local practice (e.g. drip legs, flexible appliance connector, hard piping).
- Any extra ports in the manifold are plugged until additional gas appliances are added. It is advisable to put a valve in the extra ports and then plug the valve outlet. This extra port can then be used for future expansion without turning off the existing system.

2 PSIG SYSTEM ARRANGEMENT

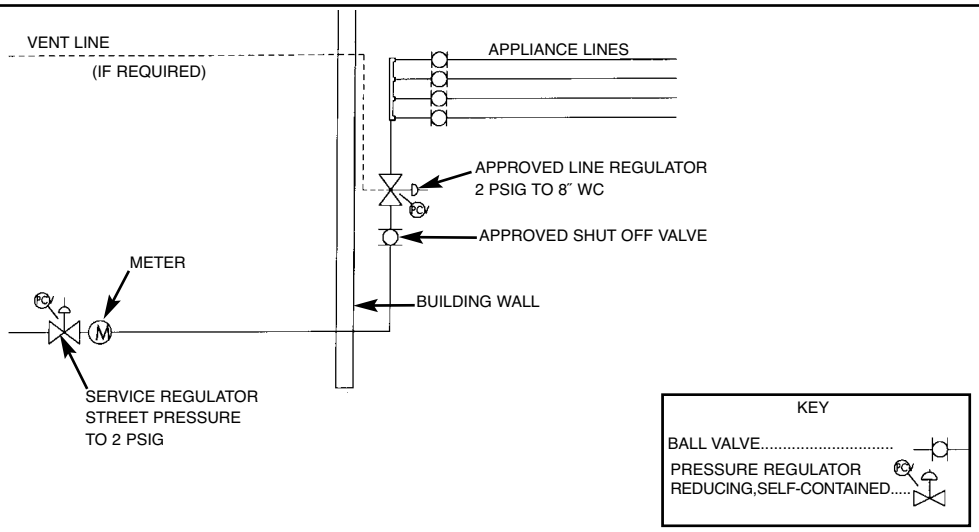

Figure 3.1

The choice of system configuration is dependent on local piping restrictions, structural arrangement, availability of elevated pressure, and the total gas load. This guide is intended only to assist the installer with design and installation practices. The gas piping system using corrugated stainless steel tubing consists of the following components:

- Corrugated Stainless Steel Tubing (CSST)
- Termination Fittings
- Mechanical Couplings (if required)
- Mechanical Tees (CSST)
- Bonding Clamp
- Mechanical Joint Fitting
- Outdoor Termination Fittings
- Flange Termination Fittings
- Valves (CSST)

SYSTEM DESIGN PROCEDURES

All piping systems using WARDFLEX® shall be designed and installed according to the requirements of this guide, which are consistent with the requirements set forth in the National Fuel Gas Code (ANSI Z223.1 in the USA, and CAN/CGA - B149) in Canada. In cases where the requirements of this guide are in conflict with local codes, the local code must take precedence, unless the local authority having jurisdiction approves a variance, or change.

The WARDFLEX® system described in this guide is intended primarily for interior use. See section 4.6.4.2 for specifics on outdoor applications. Prior to tubing installation, prepare a sketch or plan showing possible tubing routes, the locations of appliance outlets, the various appliance load demands, and the location of the points of delivery. Review the appropriate subsections of Section 3 (System Design) to evaluate system design options, i.e. elevated pressure system versus low pressure system, location and type of regulator/manifold assembly and the size of different tubing runs. Prior to sizing tubing runs, appliance load data must be obtained from the manufacturer's nameplate located on the gas appliance, or provided to the system designer by the building structure. Depending on the building code, tubing can be routed as follows:

- Beneath, through and alongside floor joists
- Inside interior wall cavities
- Through conduit embedded in concrete floors or walls

When connecting additional gas appliance to an existing gas piping system, the system must have adequate capacity for both the existing and additional gas loads. If the existing capacity is inadequate, a separate gas piping system should be provided.

DESIGN LIMITATIONS

TUBING SYSTEM OPERATING PRESSURE LIMITS

The portion of gas systems using corrugated stainless steel tubing shall operate at pressures not exceeding 5 PSIG.
The design operating pressures for the elevated pressure systems are 2-5 PSIG from the meter to the pressure regulator, and 8 in. WC from the pressure regulator to the inlet of the appliance regulator. The pressure regulator must be approved for operation for 2 or 5 PSIG inlet pressure in accord with ANSI Z21.80. On low pressure systems, less than 1/2 PSIG, where a pressure regulator is not necessary, the design operating pressure may be set by the local utility between 5 and 14 in. WC.

3.1 SYSTEM CONFIGURATIONS

3.1.1 SERIES AND PARALLEL LOW PRESSURE SYSTEMS

A series layout is the most common arrangement utilized for rigid pipe systems for low pressure. These usually consists of a main run (header) with tees branching off to each appliance. In a traditional series system, the service pressure down stream of the meter is typically 7" W.C. The minimum pressure supplied to any given appliance is an important consideration. To operate properly, most Natural Gas appliances require a minimum of 4 inches water column pressure and most Propane (Liquefied Petroleum) appliances require a minimum of 10 inches water column pressure. Allowable pressure drop along any particular run may be dictated by local code restrictions, typically it is 0.5" (1/2 inch) water column between meter and the furthest appliance.

1/2 PSIG (LOW PRESSURE) SYSTEM SERIES PIPING ARRANGEMENT

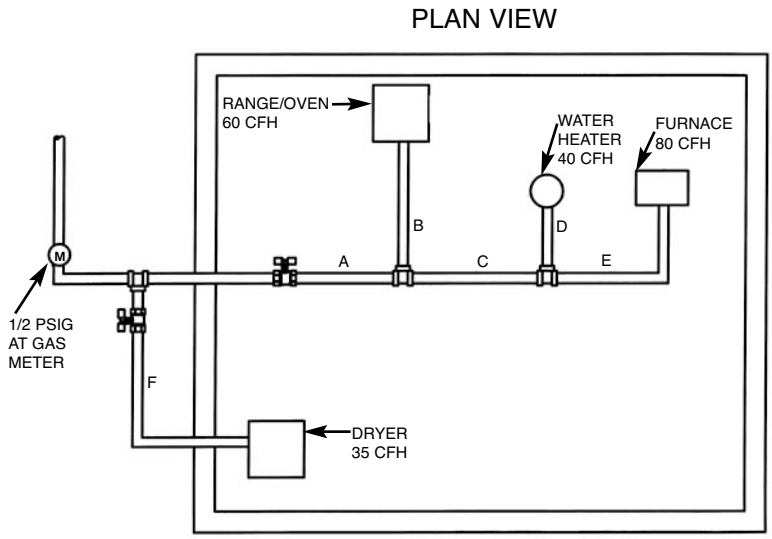

Figure 3.2

In a parallel system, appliances are serviced by individual runs that stem off from a central distribution manifold. A main run from the meter supplies the manifold. The manifold station is located close to the greatest load, typically the boiler or furnace. A parallel layout is most likely to be used in medium pressure (14 inches water column) and elevated pressure (in excess of 14 inches water column) systems.

1/2 PSIG (LOW PRESSURE SYSTEM PARALLEL PIPING ARRANGEMENT

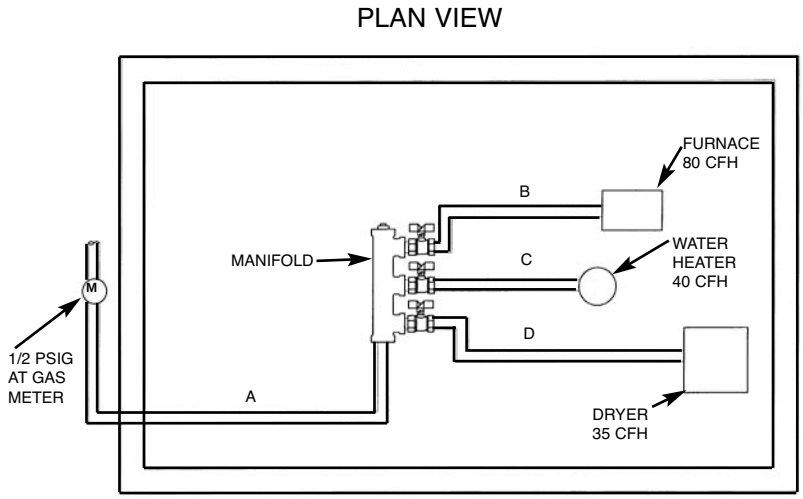

Figure 3.3

3.1.2 DUAL PRESSURE SYSTEMS

A Dual Pressure System incorporates two operating pressures downstream from the meter. The first pressure set by the service regulator at the meter, is usually 2 PSI, but can be higher or lower depending on code restrictions and gas company policy. This part of the system is sized separately and ends at the pounds-to-inches regulator inlet. The allowable pressure loss for this part of the system must be added to the effect of the regulator outlet. Refer to section 4.8 for regulator sizing and selection.

The second pressure, at the outlet of the pounds-to-inches regulator is under 1/2 PSI, usually 8 inches W.C. for natural gas and 11 inches W.C. for propane. Generally, a parallel system requires a higher total footage of smaller diameter tubing and fewer fittings compared to a series layout.

For those installations in which the energy load demand is large or the appliances are installed throughout the structure with long distances from the meter, a multiple manifold system may be used. Elevated pressure systems are a safe, efficient method of providing for larger BTU load demands while maintaining smaller pipe diameters.

2 PSIG WITH 25 FT. SERVICE LINE

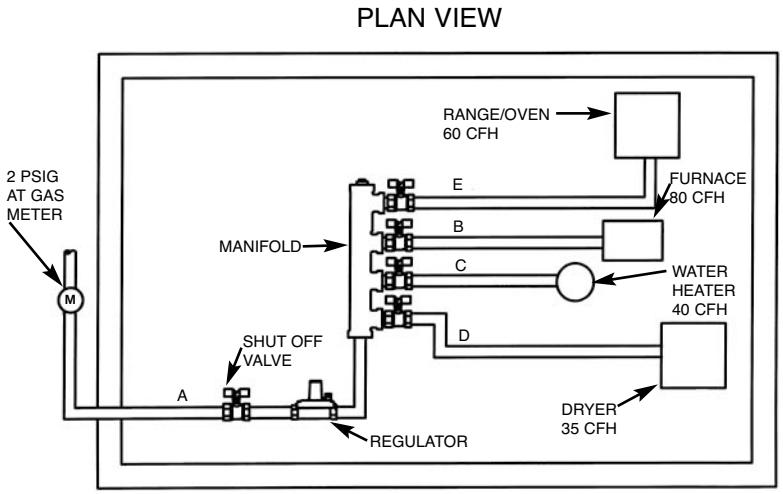

Figure 3.4

2 PSIG WITH 25 FT. SERVICE LINE

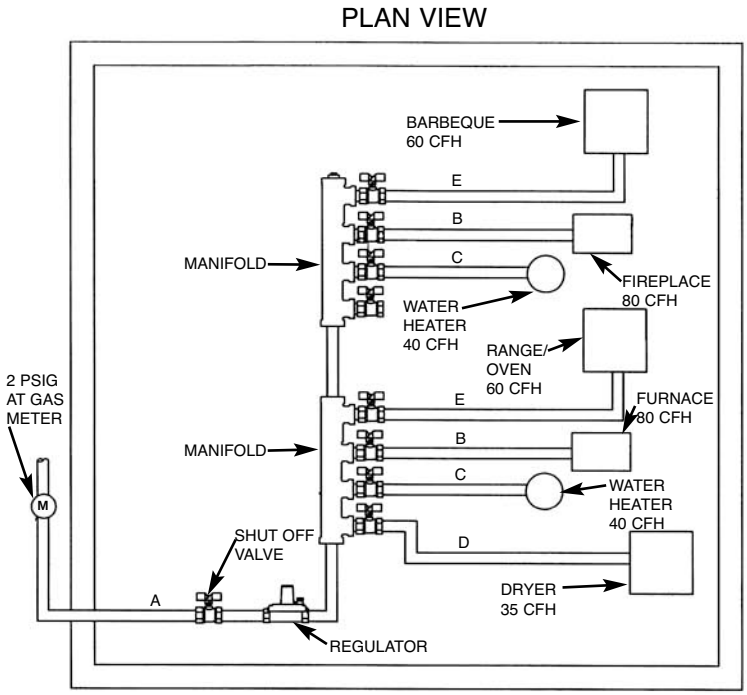

Figure 3.5

In a hybrid system, corrugated stainless steel tubing is used in combination with rigid pipe or copper tubing. In low and medium pressure systems it is often advantageous to use both CSST and rigid pipe to help minimize pressure drops typically encountered on systems with high loads and/or long runs. WARDFLEX® Flexible Gas Piping is approved for use in combination with all approved fuel gas piping materials by using approved pipe threads at the interface.

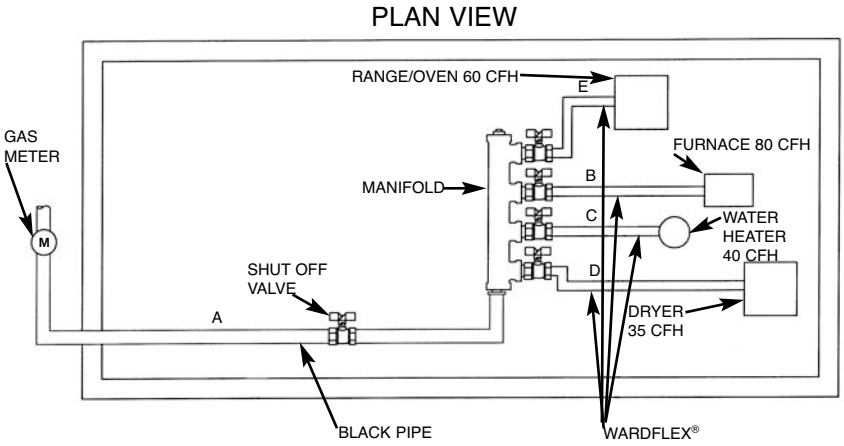

Figure 3.6

2 PSIG WITH 25 FT. SERVICE LINE

PLAN VIEW

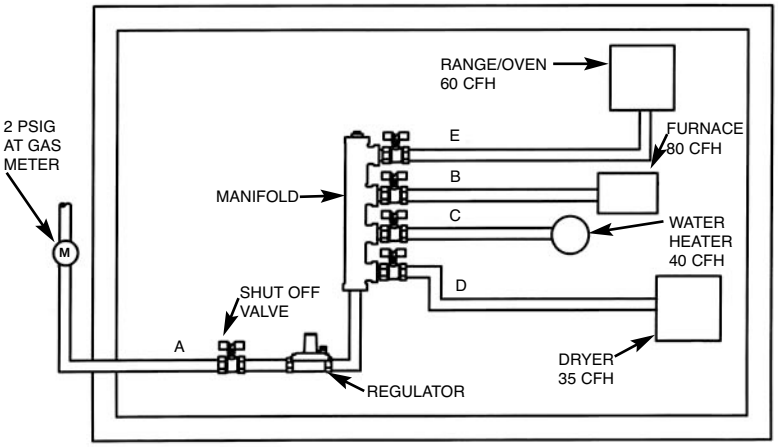

Figure 3.7

In a complete elevated pressure system, corrugated stainless steel tubing is used to deliver pressures in excess of 1/2 PSI to a pounds-to-inches regulator positioned directly in front of each appliance regulator. This is an alternate method of installation used to minimize pressure drops typically encountered on systems with high loads and/or long runs.

3.2 SIZING METHODS AND EXAMPLES

This section includes gas tubing sizing procedures for both low pressure elevated pressure systems and hybrid systems. The low pressure system is sized similar to a conventional low pressure steel pipe system. Tables A-2, A-3, A-7, A-8 and A-9 give the flow rates at different inlet pressures and pressure drops. The elevated pressure system incorporates two operating pressures downstream of the meter. The first pressure, set by the service regulator at the meter, is usually 2 PSIG, but can be higher or lower depending on code restriction and gas company policy. This part of the system is sized separately using Tables A-4, A-5, A-6 A-9, and A-10. The allowable pressure loss for this part of the system, which includes the effect of the pressure regulator, can vary from 1 to 47 in. WC. This part of the system ends at the pressure regulator. The regulator reduces the pressure from pound pressure to 8 in. WC pressure. This part of the gas distribution system is sized similar to the low pressure system, except a special table (Table A-1) allowing 3 in. of WC pressure drop is used to determine tubing sizes.

WARDFLEX® sizing software is available for downloading on our web site www.wardflex.com for all sizing procedures. The program has the ability to calculate systems with black pipe and WARDFLEX® plus it can “fix” the pipe size for use with existing systems.

3.2.1 LOW PRESSURE SYSTEMS (LONGEST LENGTH METHOD)

For each of the following tubing system examples, determine the required size for each section and outlet. To size each section of the system, determine both the total gas load for all appliances and the maximum distance in which a particular section delivers gas. The maximum distance for the section being sized includes the overall length from the meter to the furthest appliance. Refer to Table A-2 for sizing a 7 in. WC system with a designated pressure drop of 0.5 in. WC. If other pressure drop limitations are required by local code restrictions, refer to subsection 3.2.3 “Alternative Sizing Method”.

Example 1: (See Figure 3-8)

The system arrangement presented in Figure 3.8 is typical of a single family installation in which there are a limited number of appliances located in one area and the total system load is small. The supply pressure is 1/4 PSIG (7 in. WC) at the meter and the allowable pressure drop is 0.5 in. WC.

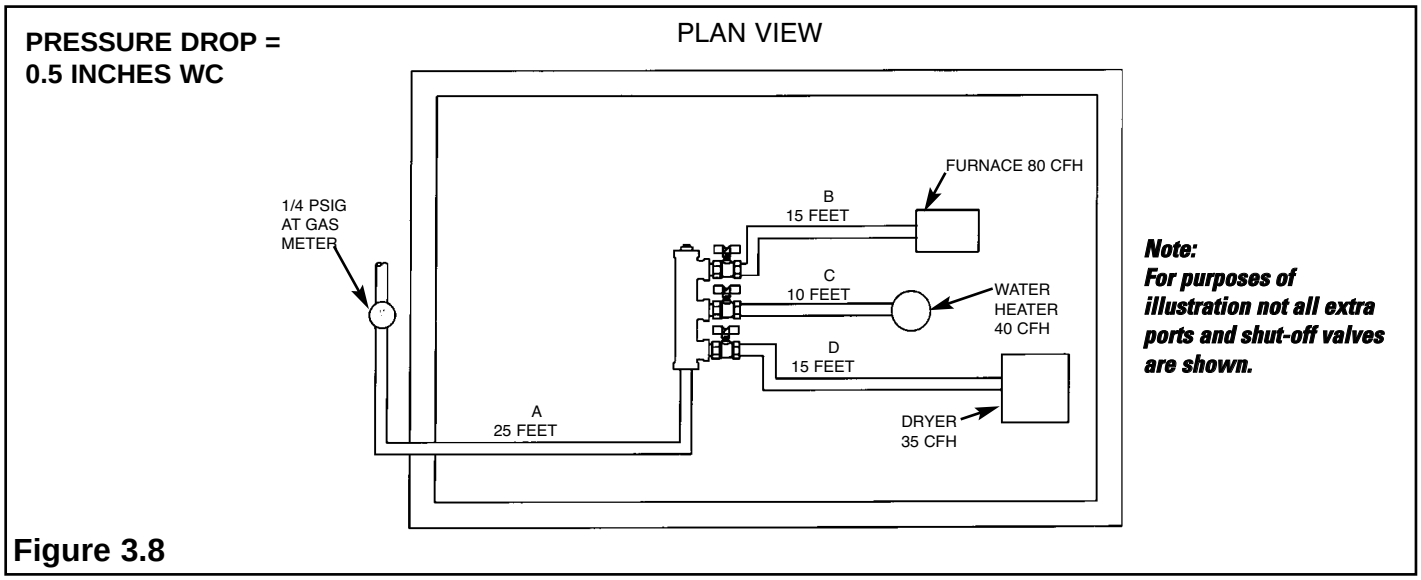

Figure 3.8

LENGTH OF RUNS	LOAD	TUBE SIZE
A = 25 feet	155 CFH	25A (1")
B = 15 feet	80 CFH	20A (3/4")
C = 10 feet	40 CFH	15A (1/2")
D = 15 feet	35 CFH	15A (1/2")

(See Figure 3.8)

1. Size Section "A"

Size section A using the longest run from the meter that includes Section A and the total gas load it must deliver.

- 40 ft. from the meter to the dryer outlet and 155 CFH total load for all appliances.
- Using Table A-2, locate the length down the left edge "Length of Tubing Run" and follow across to a capacity greater than or equal to 155 CFH.
- You will find 162 CFH. Follow that column up which indicates size 25A tubing should be used.

2. Size Section "B"

Size section B by determining the longest run from the meter that includes section B and the total gas load it must deliver.

- 40 ft. from the meter to the furnace and a load of 80 CFH.
- Refer to Table A-2 again by locating the 40 ft. length at the left and follow across to capacity greater than or equal to 80 CFH.
- A capacity of 97 CFH is indicated with size 20A tubing.

3. Size Section "C"

- 35 ft. from the meter to the water heater and a load of 40 CFH.
- Table A-2 indicates size 15A tubing will be required. Tubing length for the water heater is 35 ft., which falls between 30 and 40 ft. Take the next higher tubing length (40 ft.) and determine the appropriate tubing size.
- Capacity of 47 CFH is indicated with size 15A tubing.

4. Size Section "D"

- 40 ft. from the meter to the dryer and a load of 35 CFH.
- For a length of 40 ft., find a value greater than 40 CFH in Table A-2.
- A capacity of 47 CFH is indicated with size 15A tubing.

Example 2: (See Figure 3.9)

This 1/2 PSIG (low pressure) system is similar to Example 1 except it has higher loads, additional appliances and a shorter service line from the meter to the manifold. This system design also uses a parallel tubing arrangement from the end of the service line.

1/2 PSIG (LOW PRESSURE) SYSTEM WITH ADDITIONAL SERVICE

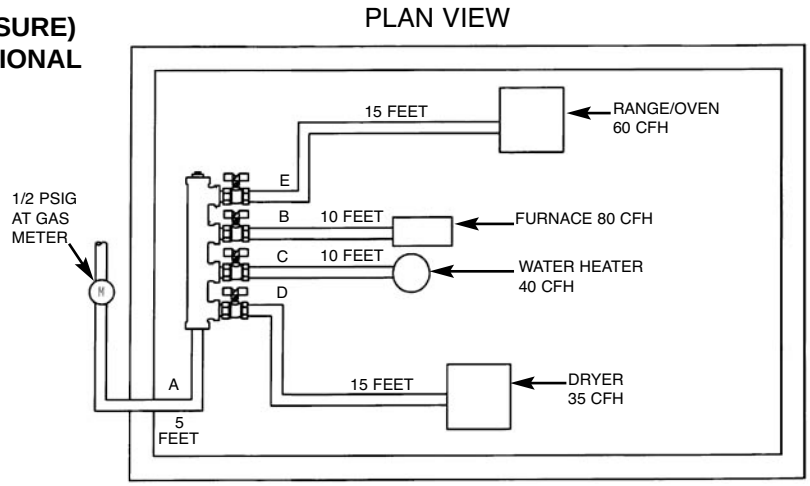

Figure 3.9

LENGTH OF RUNS	LOAD	TUBE SIZE
A = 5 feet	215 CFH	15A (1/2″)
B = 10 feet	80 CFH	10A (3/8″)
C = 10 feet	40 CFH	10A (3/8″)
D = 15 feet	35 CFH	10A (3/8″)
E = 15 feet	60 CFH	10A (3/8″)

The proper sizing procedure is as follows: (See Figure 3.9)

1. Size Section "A"

- Determine distance from meter to furthest appliance (range/oven 20 ft.).
- Determine total load supplies by "A" (215 CFH).
- Refer to Table A-3 for a length of 20 ft. and a load of 215 CFH.
- Section "A" will be size 15A tubing.

2. Size Section "B"

- Distance from meter to furnace is 15 ft.
- Load is 80 CFH.
- Table A-3 indicates size 10A tubing.

3. Size Section "C"

- Distance from meter to water heater is 15 ft.
- Load is 40 CFH.
- Table A-3 indicates size 10A tubing is required.

4. Size Section "D"

- Distance. from the meter to the dryer is 20 ft.
- Load is 35 CFH.
- Table A-3 indicates size 10A tubing is required.

5. Size Section "E"

- Distance. from the meter to range/oven is 20 ft.
- Load is 60 CFH.
- Table A-3 indicates size 10A tubing is required.

Example 3: (See Figure 3.10)

This tubing system demonstrates a series versus parallel tubing arrangement. The appliances are installed apart rather than in a cluster as in Examples 1 and 2. Section A is sized for maximum gas capacity for the tubing sizes available. However, the system design does incorporate an additional appliance (dryer) which requires a separate feed from the meter. This allows additional service without enlarging the supply line to the other appliances. Each section of tubing is sized by the following procedure: (See Figure 3.10)

1/2 PSIG (LOW PRESSURE) SYSTEM SERIES PIPING ARRANGEMENT

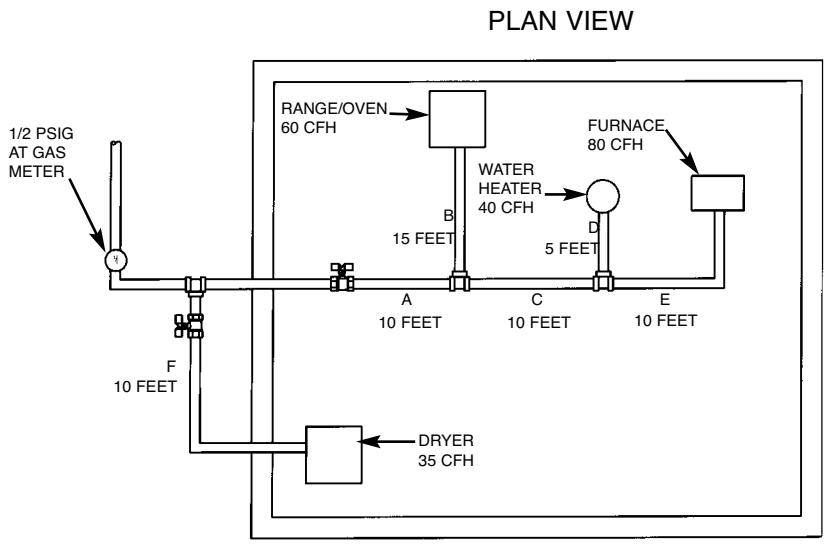

Figure 3.10

1. Size Section "A"

- Distance from meter to furthest appliance (furnace) is 30 ft.
- The load that "A" delivers is 180 CFH.
- Table A-3 at 30 ft. indicates a flow of 189 CFH with size 15A tubing.

LENGTH OF RUNS	LOAD	TUBE SIZE
A = 10 feet	180 CFH	15A (1/2")
B = 15 feet	60 CFH	10A (3/8")
C = 10 feet	120 CFH	15A (1/2")
D = 5 feet	40 CFH	10A (3/8")
E = 10 feet	80 CFH	10A (3/8")
F = 10 feet	35 CFH	10A (3/8")

2. Size Section "B"
   - Distance from meter to range/oven is 25 ft.
   - Load is 60 CFH.
   - Table A-3 indicates size 10A tubing.
3. Size Section "C"
   - The longest run from the meter that includes section "C" is 30 ft. (meter to furnace).
   - The total load that "C" delivers is 120 CFH.
   - Table A-3 shows size 15A tubing can deliver 189 CFH.
4. Size Section "D"
   - Meter to water heater is 25 ft.
   - Load is 40 CFH.
   - Table A-3 indicates size 10A tubing.
5. Size Section "E"
   - The longest run that includes section "E" from the meter to the furnace is 30 ft.
   - Load is 80 CFH.
   - Table A-3 indicates size 10A tubing is required.

6 Size Section "F"

- The longest run that includes section "F" from the meter to the dryer is 10 ft.
- Load is 35 CFH.
- Table A-3 indicates size 10A tubing is required.

3.2.2 ELEVATED PRESSURE SYSTEM

The proper sizing of an elevated pressure system consists of three (3) parts:

- Calculate the total load in the structure to determine if one regulator is sufficient. (See section 4.8)
- Sizing the run between the meter and the pressure regulator.
- Sizing the runs between the pressure regulator and the appliances.

Pressure Regulator

One pressure regulator is usually sufficient when a group of appliances are close together. However, when they are widely separated it may be more economical to use one pressure regulator for each group.

Sizing Meter-Regulator Run

Tables A-4 through A-7 and A-9 and A-10 are used to size the run between the meter and the regulator. These tables include the pressure drop through the regulator. For example, Table A-4 can be used when the pressure regulator is a Maxitrol 325-3 and a 2 PSIG line serves only one regulator. Pressure drop curves presented in Tables A-15 and A-16 for the available tubing can also be used to size CSST if the Tables are not applicable. The curves indicate a pressure loss coefficient in inches WC per foot of tubing, but do not include internal regulator pressure drop. This approach, which is more theoretical, requires the determination of pressure loss for each component of the system. Refer to subsection on "Alternative Sizing Method".

Sizing Regulator-Appliance Run

Having sized the 2 PSIG gas line to the regulator(s), size the low, typically 8 in. WC, pressure gas lines between the pressure regulator and the appliances. Refer to Table A-1 to determine the correct size of the corrugated tubing at 8 in. WC pressure with an allowable pressure drop of 3 in WC. Again, use the pressure loss curves in Table A-1 if the available pressure at the regulator serving the appliances is other than indicated in Table A-1. See subsection on "Alternative Sizing Method".

The following examples illustrate this procedure.

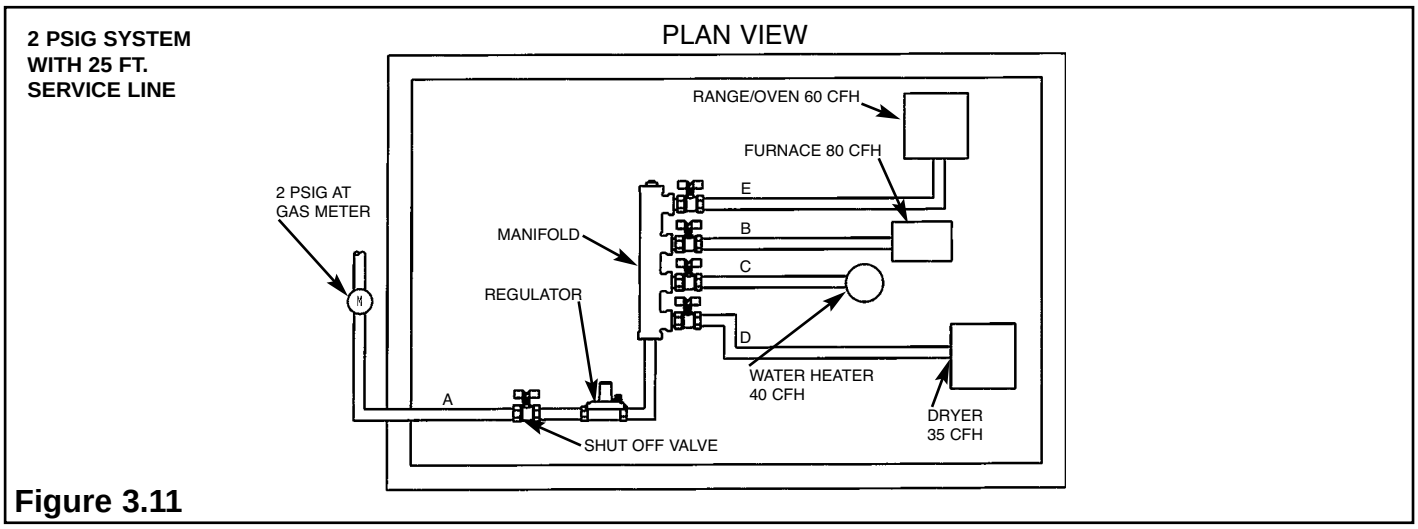

Figure 3.11

Example 4 (See Figure 3.11)

This piping arrangement presented in Figure 3.11 illustrates a typical single family application utilizing a 2 PSIG system instead of the low pressure system for a similar layout shown in Figure 3.3. The system is capable of serving several large capacity appliances from a distant meter location. The pressure regulator is located central to all appliances and serves pressure to each appliance via a manifold with an individual appliance line.

LENGTH OF RUN	LOAD	TUBE SIZE	SUPPLY PRESSURE
A = 25 feet	215 CFH	10A (3/8″)	2 PSIG
B = 15 feet	80 CFH	10A (3/8″)	8″ WC
C = 10 feet	40 CFH	10A (3/8″)	8″ WC
D = 25 feet	35 CFH	10A (3/8″)	8″ WC
E = 15 feet	60 CFH	10A (3/8″)	8″ WC

The proper sizing procedure is as follows: (See Figure 3.11)

1. Size Section "A"

- Determine distance from meter to regulator (25 ft.).
- Determine the load supply by "A" (215 CFH).
- Refer to Table A-4 to determine the tubing size needed to deliver the maximum system capacity at 2 PSIG use 10A per table A-4.

2. To size the other sections, consider the source to be the pressure regulator rather than the meter. Use the low pressure Table A-1 and size the sections individually by using the longest run that includes the section being sized and the total load it must deliver.

3. Size Section "B"

- Regulator to furnace is 15 ft.
- Load is 80 CFH.
- Table A-1 indicates size 10A tubing.

4. Size Section "C"

- Regulator to water heater is 10 ft.
- Load is 40 CFH.
- Table A-1 indicates size 10A tubing.

5. Size Section "D"

- Regulator to dryer is 25 ft.
- Load is 35 CFH.
- Table A-1 indicates size 10A tubing.

6 Size Section "E"

- Regulator to range/oven is 15 ft.
- Load is 60 CFH.
- Table A-1 indicates size 10A tubing.

Example 5 (See Figure 3.12)

The tubing arrangement presented in Figure 3.12 is similar to Example 4 in respect to the appliance loads and their locations relative to the regulator and manifold. However, this example illustrates a 2 PSIG system adapted for multi-family application with a long (150) run from the meter to the regulator. Figure 3.5 depicts a typical unit within a multi-family building having a centralized meter set. The building could be either a low-rise, high-rise or townhouse attached structure.

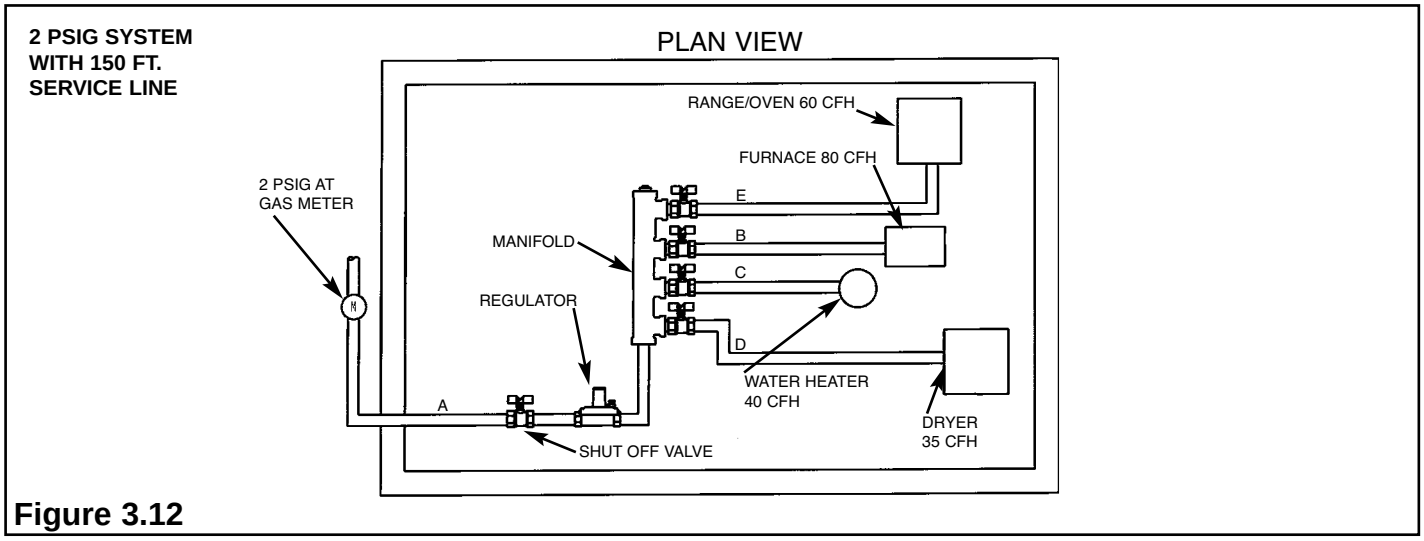

Figure 3.12

The sizing procedure is similar to Example 4. The only difference is the section "A" tubing size. The appliance lines are the same length and size.

LENGTH OF RUN	LOAD	TUBE SIZE	SUPPLY PRESSURE
A = 150 feet	215 CFH	20A (3/4″)	2 PSIG
B = 15 feet	80 CFH	10A (3/8″)	8″ WC
C = 10 feet	40 CFH	10A (3/8″)	8″ WC
D = 25 feet	35 CFH	10A (3/8″)	8″ WC
E = 15 feet	60 CFH	10A (3/8″)	8″ WC

3.2.3 COMBINATION STEEL/CSST SYSTEMS

Add-On Installations

WARDFLEX® may be added to existing steel pipe systems with the following provision:

WARDFLEX® is rated for 5 PSIG service, any systems with a higher pressure must include a pressure regulator between the gas supply and the WARDFLEX® tubing.

The maximum distance for the section being sized includes the overall length from the meter to the furthest appliance. This includes the lengths of both the CSST and the steel pipe.

The tubing size in a modified system uses the same procedure as with a complete CSST system where each branch is sized individually according to the load.

Example 6 (See Figure 3.8)

Note: For purposes of this illustration consider that section "A" consists of steel pipe and that it has been determined that sufficient gas capacity is available to operate the additional appliance and ignore "C" and "D".

1. Size section "B" by determining the longest run from the meter to appliance "B" and the total gas load it must deliver (steel + CSST).
   - 40 feet from the meter to the furnace and a load of 80 CFH.
   - Refer to Table A-2 by locating the 40 ft. length on the left and follow across to capacity greater than or equal to 80 CFH.
   - A capacity of 97 CFH is indicated with size 20A tubing.

Branch sizing procedures are exactly the same as in previous Examples 1-5.

New Installations

In applications such as multi-apartment buildings which use black pipe for the main gas lines and where WARDFLEX® is desired for distribution to individual apartments, contact Ward Manufacturing's Engineering Department for assistance.

Alternate Sizing Method Pressure Drop Per Foot

Contact Ward Manufacturing's Engineering Department for details of Alternate Sizing Methods where supply line pressure and "allowable pressure drop" are different from those stated in the sizing tables provided in this guide.

This sizing involves calculations based on summations of pressure drops and special applications where exact loads must be calculated.

3.3 SUMMATION SIZING OF WARDFLEX® SYSTEMS

The Summation Sizing Method calculates WARDFLEX® CSST tubing and steel pipe sizes taking into consideration available gas pressure and the allowable water column drop of gas pressure in Inches of Water Column.

The chart (Table A-18) shows the pressure drop per foot for WARDFLEX® and steel pipe in columns for designated flows up to 5,000 CFH. Each row refers to a specific flow rate in cubic feet per hour (CFH).

Chart values apply to Natural Gas (0.6 Specific Gravity) and Propane (1.52 Specific Gravity) for pressures less than 0.5 PSI (14 inches W.C.) down to 5" W.C..

To use the chart:

1. Make a sketch of the system showing loads and lengths.
2. Find the desired flow in the left column.
3. Find the column for the WARDFLEX® or Steel Pipe size to be used. Trace the column down to where it crosses the row for the desired flow and write down this figure. (E.g. for natural gas at a flow of 100 CFH using WARDFLEX® 10A, this figure is 0.2403.) This is the pressure drop per foot for WARDFLEX® (using the same formulas used to create CSST Tables 9-19 through 9-23 in the National Fuel Gas Code,) or for pipe (according to formulas supplied in the National Fuel Gas Code, Appendix C, Section C.3).
4. Multiply the WARDFLEX®/steel pipe length by this figure to get to the pressure drop though the WARDFLEX®/pipe portion of the system. (E.g. 30 feet of WARDFLEX® 10A equals; 30 X .02403=.7209 inches W.C. pressure drop in this leg.)
5. Repeat this procedure for each leg, calculating the pressure drop of each leg.
6. Add the pressure drops together to get the total system pressure drop. Note: the total load through each junction must be used when calculating the pressure drop but only the actual length of the leg is used.
7. If the pressure drop is greater than the allowed pressure drop, either the WARDFLEX® or the pipe size must be increased.
8. The pressure drop charts (Table A-18) are more precise than the line charts in the WARDFLEX® Design and Installation Guide, (Tables A-15) and is the method referred to in the Alternate Sizing Method, Section 3.2.3 of the current manual.

Two examples follow:

Example 1: CSST SYSTEM

A single dwelling with three appliances, 80 CFH furnace, 40 CFH water heater and 30 CFH fireplace.

Typical low pressure system;
5" W.C. supply pressure
0.5" W.C. pressure drop allowed
Outlet pressure cannot be less than 4.5" W.C.

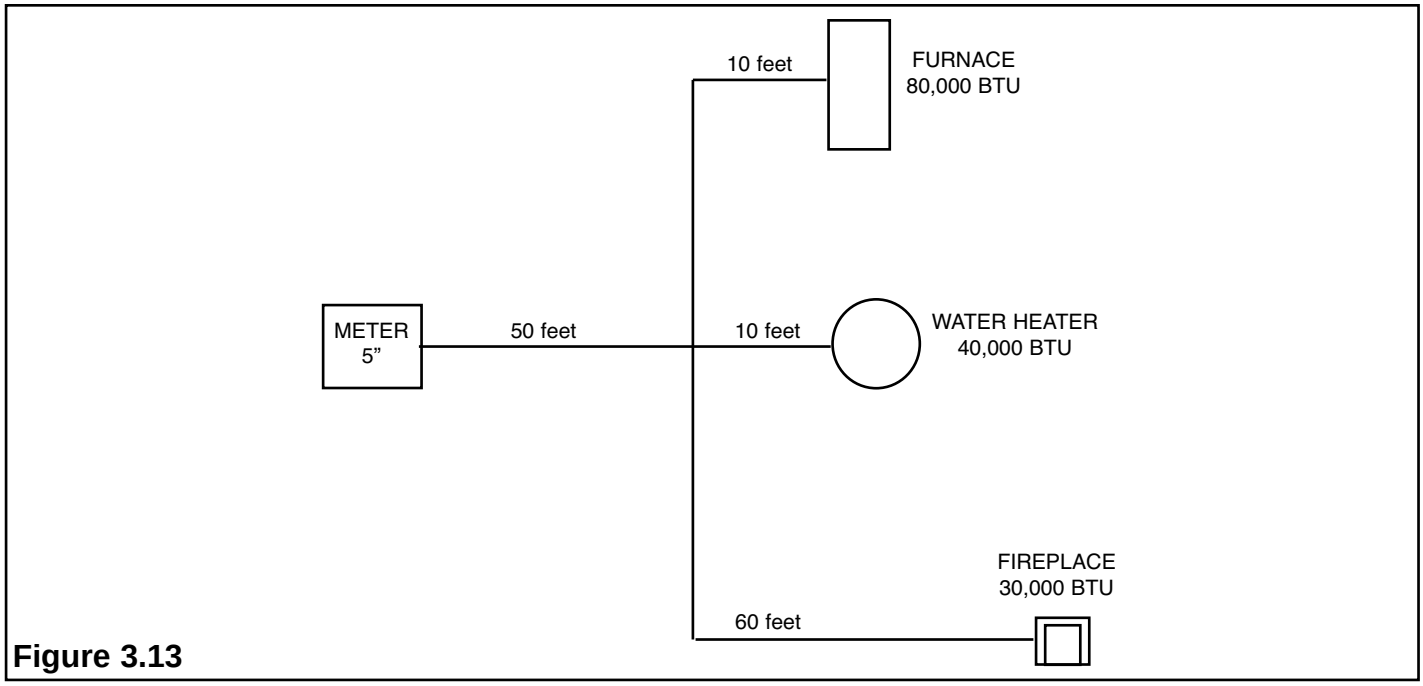

Figure 3.13

Using the ***Longest Length Method***, 110′ is the longest length and using chart A-2 in the WARDFLEX® Design and Installation Guide the size required would be:

150 CFH at 110′ (50+60) = 32A
30 CFH at 110′ (50+60) = 20A
40 CFH at 60′ (50+10) = 20A
80 CFH at 60′ (50+10) = 20A

The same system using the ***Summation Method*** calculates pressure drop as follows:

	Total Pressure Drop at Appliance
At 150 CFH 32A (1-1/4”) pressure drop per foot is 50′ X .0020 = .100,	.100
At 80 CFH 15A (1/2”) pressure drop per foot is 10′ X .0353 = .353,	.100+.353 = .453
At 40 CFH 15A (1/2”) pressure drop per foot is 10′ X .0087 = .087,	.100+.087 = .187
At 30 CFH 15A (1/2”) pressure drop per foot is 60′ X .0049 = .294,	.100+.294 = .394

A comparison between the two method shows that 80 feet of 20A (3/4”) CSST is required for the ***“Longest Length Method”*** while the ***“Summation Method”*** requires 80 feet of 15A (1/2˝) CSST.

If the calculated total pressure drop at the appliance is at or below the allowable pressure drop (.5” in this example), the chosen tubing or pipe can be used or recalculated using the next smaller tubing or pipe size to see if the size results in a figure at or below the allowable pressure drop. If the calculated pressure drop is more than the allowable pressure drop, recalculate using a larger tubing/pipe size.

Example 2: CSST + STEEL PIPE

A three story apartment building (10′ between floors), six apartments per floor (20′ apart), with three appliances totaling 110 CFH or 110,000 BTU. Ie. total length to the farthest apartment is 90′. Risers are 2” pipes and main lines are 1-1/2” pipe. Low pressure system (.5” W.C.).

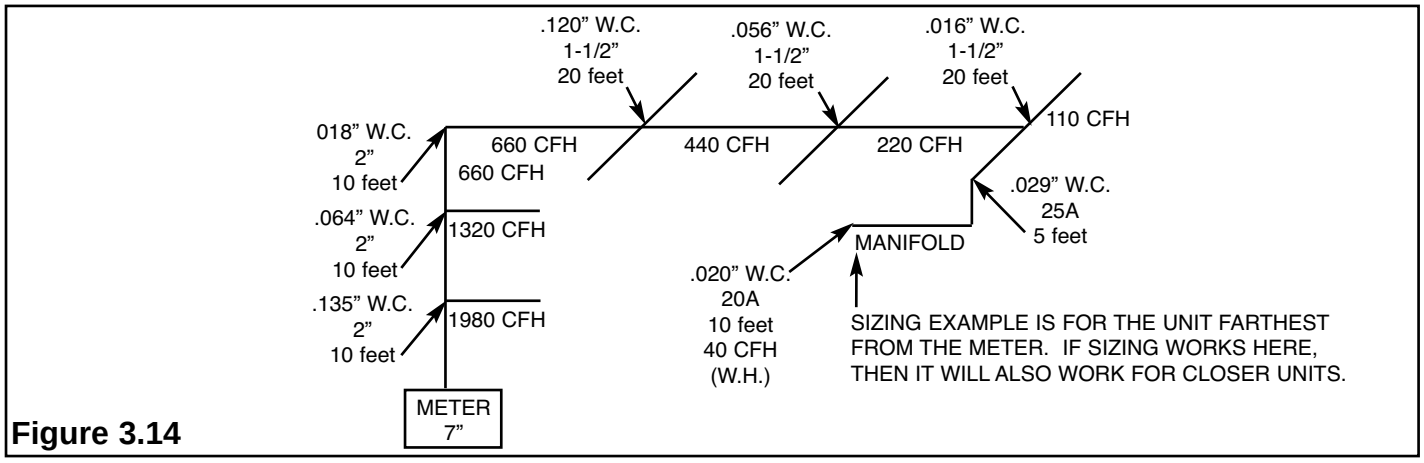

Figure 3.14

If each apartment has a load of 110 CFH, each junction of the main line increases at the rate of 220 CFH for a floor load of 660 CFH. Three floors at 660 CFH yield 1320 CFH through the riser at the second floor and 1980 CFH at the first floor.

At 1980 CFH 2˝ pipe pressure drop per foot is	10´ X .0135˝ =	.135˝
At 1320 CFH 2˝ pipe pressure drop per foot is	10´ X .0064˝ =	.064˝
At 660 CFH 2˝ pipe pressure drop per foot is	10´ X .0018" =	.018˝
	2˝ Pipe Subtotal	.217˝
At 660 CFH 1-1/2˝ pipe pressure drop per foot is	20´ X .0060˝ =	.120˝
At 440 CFH 1-1/2˝ pipe pressure drop per foot is	20´ X .0028˝ =	.056˝
At 220 CFH 1-1/2˝ pipe pressure drop per foot is	20´ X .0008˝ =	.016˝
	1-1/2˝ Pipe Subtotal	.192˝
At 110 CFH 25A pressure drop is	5´ X .0058˝ =	.029˝
At 40 CFH 20A pressure drop is	10´ X .002˝ = .020˝=	.020˝
	WARDFLEX® Subtotal	.049˝
	TOTAL Pressure Drop	.458˝

Alternatively, using the Longest Length Method, calculating the pressure drop all the way back to the supply point i.e. 110 CFH at 95' from chart A-2 would require an individual 32A line for this apartment.

3.4 WARDFLEX® SIZING PROGRAM

A free sizing program is available for download from the WARDFLEX® website at www.wardflex.com Select "WARDFLEX® SIZING APPLICATION". This is a zip file which can be extracted and run on a personal computer. Instructions for use are given in the HELP file.

The application uses summation sizing. It calculates pressure-drops through each individual branch. Advantages over the longest-length method include the ability to calculate WARDFLEX® and pipe within a system, and the ability to use smaller sizes. The calculations are explained in section 3.3.

Printouts include:

- Schematic layout.
- Tubing Bill of Material.
- Sizing chart (in EXCEL format), keyed to the schematic layout

Low-pressure and dual-pressure systems can be sized in English or metric units. Natural gas or propane can be selected. Combinations of WARDFLEX® and pipe can be used. WARDFLEX® and pipe sizes can be "fixed", a handy benefit when modifying existing pipe systems.

Three setup methods are available:

- Fixed or conventional pressure drops - Includes conventional pressure drops (.3˝, .5˝, 1˝, 3˝, 6˝, 1 PSI and 3.5 PSI) for natural gas and propane.
- Delivery pressure - Allows the supply and delivery pressures to be entered, and ignores actual pressure-drop in the calculation.
- User-Defined pressure drop for metric systems - Allows supply pressure and pressure-drop to be specified.

4.1 GENERAL INSTALLATION PRACTICES

- All system hardware should be stored in its original packaging prior to installation and kept in a dry location The gas tubing should not be left outside prior to installation.
- The tubing shall be of adequate length and capacity.
- Tubing exposed to extreme low temperatures should be allowed to come up to room temperature.
- Tubing may be routed through concrete floors or walls, provided it is passed through previously embedded conduit. ***Tubing shall not be buried directly underground.***
- The CSST is typically routed: - beneath, through and alongside floor joists - inside interior wall cavities on top of ceiling joists in attic space.
- Carefully unwind and route the tubing from the reel to the required location, making certain not to kink, tangle or apply excessive force.
- Tubing end must be temporarily capped or taped closed prior to installation to prevent contamination from foreign material.
- When installing WARDFLEX® avoid sharp bends, stretching, kinking, twisting, or contacting sharp objects. The tubing shall be replaced if damage occurs. See Section 5.0.
- Typical tubing runs are usually made either parallel or perpendicular to the joists. Diagonal runs are acceptable if allowed by local codes.
- Make continuous runs whenever possible.
- Grading is not required with the WARDFLEX® tubing. Refer to subsection 4.1.2 "Minimum Bend Radii" for minimum bend radius specifications.
- WARDFLEX® system components shall not be exposed to any acids, bases, salts or other caustic materials.Some chemical compounds have been identified that may aggressively corrode 304 stainless steel. Contact with these chemicals should be absolutely avoided. Any contact should immediately and thoroughly washed off. The plastic covering is not affected by these compounds and will protect the tubing as long as it is undamaged.

CHEMICALS TO AVOID INCLUDE: BUT NOT LIMITED TO:

- Hydrochloric Acid (common name: muriatic or brickwash)
- Zinc Chloride and Ammonium Chloride (soldering flux, pool algaecide)
- Calcium or Sodium Hypochlorite (bleach or pool chemicals)
- Copper Chloride (may be found in fungicides or wood preservatives)
- Ferric Chloride (swimming pool flocculent)
- Phosphoric Acid (scale removers)
- Sodium Chloride (salt water)
- Sulfuric Acid (battery acid)
- Leak detection with chloride-containing compounds found in some common soap (e.g., dishwashing soap) can corrode WARDFLEX®. Avoid use of these compounds in connection with WARDFLEX®.

Any leak detection solution coming in contact with the WARDFLEX® System should have a sulfur and halogen content of less than 10 ppm of each (ASTM E515-05 section 7.4).

- When installed in, through, or around sharp metal structures (metal studs, sheet metal, I-beams), grommets or protective tubing should be used to prevent any direct contact which could subject the tubing to damage. (See Figure 4.29)

4.1.1 TOOLS FOR INSTALLATION

NAME OF TOOL	APPLICATION
Open End Wrench	For Assembly of Fittings
Adjustable Wrench	For Gas Outlet Devices and Manifold Attachments
Pipe Wrench	For Attachments of Tubing to Fittings and Manifold Body
Screw Driver	For Mounting of Termination Fittings and Striker Plates
Hammer	For Fastening Supports, Striker and Termination Plates
Drill	For Boring Clearance Holes Through Wood or Metal Framing. Recommended Clearance Hole Size: 1/2" Larger than Tubing Diameter See Table 4 - 5

4.1.2 MINIMUM BEND RADII

There are two conditions in which a minimum bend radius is specified:

- Tubing alone (See Table 4 - 1)
- Tubing / fitting combination (See Table 4 - 1)

Regardless of the condition large, smooth radius bends are preferred in order to reduce pressure loss. Avoid repeated bending of tubing during installation.

Bending Specifications

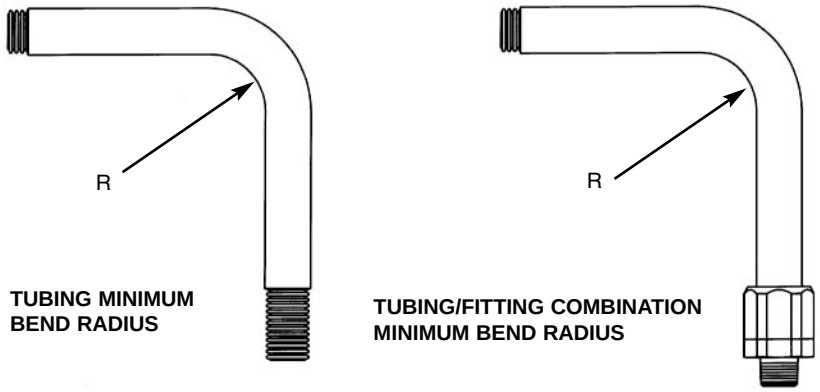

Table 4 - 1 Bend Radii

TUBING SIZE	TUBING ALONE (IN.)	TUBING/FITTING COMBINATION (IN.)	RECOMMENDED INSTALLED BEND RADIUS (IN.)
10A (3/8")	3/4"	1-1/2"	3"
15A (1/2")	3/4"	1-1/2"	3"
20A (3/4")	1"	2"	3"
25A (1")	1-1/4"	2-1/2"	3"
32A (1-1/4")	1-5/8"	3-1/4"	4"
38A (1-1/2")	4"	4-1/2"	5"
50A (2")	4-1/2"	6"	6"

4.1.3 DEBRIS PROTECTION

Tubing ends must be temporarily capped or taped prior to installation to prevent contamination from foreign material.

4.2 FITTING ASSEMBLY

SIZE OF FITTING	WARDFLEX® MAXIMUM TIGHTENING TORQUE
10M (3/8″)	50 ft.-lb
15M (1/2″)	50 ft.-lb.
20M (3/4″)	120 ft.-lb
25M (1″)	160 ft.-lb.
32M (1-1/4″)	200 ft.-lb.
38M (1-1/2″)	200 ft.-lb.

Table 4 - 2
Maximum Allowable Nut Tightening Torques for Connecting Fittings to Corrugated Stainless Steel Tubing

4.2.1 TUBING CUTTING/END PREPARATION

Mechanical Joints, Mechanical Couplings, Tees and Indoor Termination Fittings

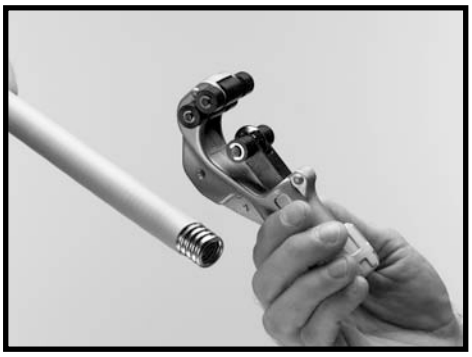

Step 1
Cut WARDFLEX® tubing and remove Polyethylene coating to expose a minimum of four corrugations.

Step 2
Slide nut over tubing and place retainer ring. Leave one corrugation exposed on the end of tubing.

Step 3
Slide nut over retainer and hand-tighten nut to body.

Step 4
Tighten with wrenches until nut contacts body.

Step 5 - (Mechanical Joint Fittings Only) Apply teflon tape or approved pipe sealant to pipe thread portion of the fitting. Thread body into manifold or malleable iron pipe fitting. (Indoor Termination Fitting Only) Mount Termination Plate by at least two corners. Route tubing through the hole in the Plate.

Step 6 - Tighten Nut until it bottoms out on Body. The tightening torque should not exceed the values listed in Table 4-2.

During tightening, rotate the Nut ONLY; The Body must not be rotated with respect to the tubing.

4.2.2 INDOOR/OUTDOOR TERMINATION FITTINGS

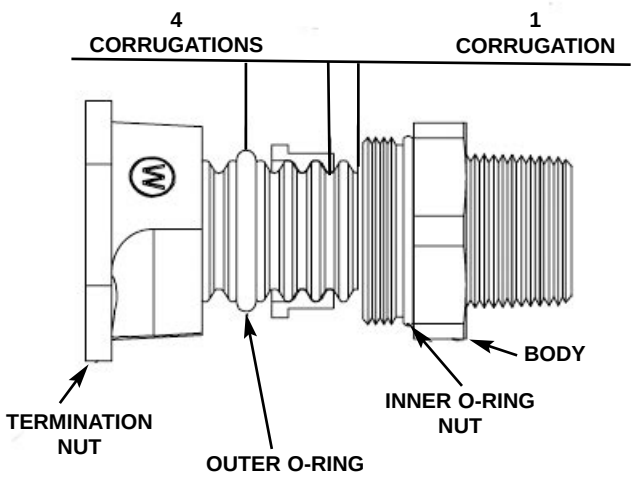

Step 1 To make the initial cut, straighten the tubing in the area to be cut. Cut the tubing with the tubing cutter.

Step 2 Strip plastic coating approximately 2 inches from the cut end using the coating stripper.

Step 3 To make the final cut in preparation for fitting assembly, straighten the exposed tubing in the area to be cut. Cut the tubing slowly, no more than 1/4 turn of the knob per revolution until cut is complete. Check that the end is free from burrs or tears

Step 4 Strip the plastic coating at the cut end to expose 4 corrugations of CSST.

Step 5 Apply Teflon tape or approved pipe sealant to pipe thread portion of fitting. Thread body into manifold or malleable pipe fitting. **Note:** if installing the termination fitting indoors proceed to step 7.

Step 6 Slide larger diameter O-ring over straight-threaded end of the body until it seats against hex face.

Step 7 Slide the outdoor termination nut and included mounting plate (if required) onto tubing. The threaded end must point toward the end of tubing.
Note: if installing the termination fitting indoors proceed to step 9.

Step 8 Slide the smaller diameter O-ring onto the 4th corrugation from the end. The O-ring may be lubricated with a non-petroleum-based lubricant to ease the final assembly.

Step 9 Make sure that the gasket is installed in its proper position. Install a retainer on the tubing leaving 1 corrugation between the end of the tubing and retainer. Insert the tubing and retainer into the body.

Step 10 Tighten the nut until it bottoms out on body. During tightening, the body must not be rotated with respect to the tubing. To reuse the fitting assembly, replace O-rings.

Step 11 Attach the nut directly to the structure with two screws (e.g. floor) or using the included mounting plate (e.g. used on a stud).

4.3 Routing

4.3.1 VERTICAL FRAME MEMBERS

- Holes drilled in vertical members of the wall framing should not exceed 1/4 the width of the member.

4.3.2 HORIZONTAL FRAME MEMBERS

- Holes drilled in plates and other horizontal frame members should not exceed 1/2 the width of the member.
- All horizontal tubing runs shall be supported as specified in the table below. Vertical drops within a wall should not be anchored because they are less likely to be punctured. Vertical drops must be supported between floors.

TUBING SIZE	MINIMUM SUPPORT INTERVAL
10A (3/8″)	4 ft.
15A (1/2″)	4 ft.
20A (3/4″)	6 ft.
25A (1″)	6 ft.
32A (1-1/4″)	6 ft.
38A (1-1/2″)	6 ft.
50A (2″)	6 ft.

Table 4 - 4 Supporting Intervals

- Tubing runs parallel to the joist should be supported to the center of the vertical face at least 3 in. from the floor or ceiling or inside an "I" beam flange.
- Tubing runs perpendicular to the joists. It should be supported, preferably routed through drilled holes in the joists.
- Tubing routed on top of ceiling joists and other structural members that comply with Table 4 support intervals does not require strapping or tie downs. This method is typical for slab on grade construction.
- Support WARDFLEX® vertically every ten feet.
- Support should be metallic pipe straps/hangers with rubber, vinyl, or other type of non metallic cushion material to prevent any sharp edges of the hanger from damaging the CSST. For more information on approved hangers, supports and anchors refer to section 7.2.6.1 of the 2009 National Fuel Gas Code.

4.3.3 DRILLING AND NOTCHING

- Avoid drilling through structural members.
- All clearance holes for routing shall have a diameter at least 1/2" greater than the outside diameter of the tubing. See Table 4 - 5 for minimum hole diameter.

TUBING SIZE	10A (3/8″)	15A (1/2″)	20A (3/4″)	25A (1″)	32A (1-1/4″)	38A (1-1/2″)	50A (2″)
MINIMUM CLEARANCE HOLE DIAMETER	1-1/8″	1-1/4"	1-1/2"	1-3/4"	2-1/4"	2-5/8"	3-1/4"

Table 4 - 5 Clearance Hole Diameter

Beams and Joists

- Drilling and notching through beams and joists is acceptable if allowed by local code, and shall only be considered after discussion with the local authority and/or builder.
- Drilled holes should not exceed 1/2 the width of the frame member.
- Notching is not preferred practice, however, when notching, the notched depth must be a minimum of one tubing diameter with the maximum notch being determined by local code.
- Where a hole is to be drilled in a joist, the outside edge of the hole should be located not less than 3 in. away from the floor or ceiling.

See Figure 4.8. Where practical tubing runs should be located near a support beam or supporting wall.

See Table 4-6 for maximum hole size in structural member.

Table 4 - 6 Maximum Recommended Hole Drilling Diameters For Various Structural Members For All CSST Sizes (LC-1-2005 Sizes Greater Than 1" (25mm) Shall Be Protected Along It's Entire Concealed Length...1.8.g.5)

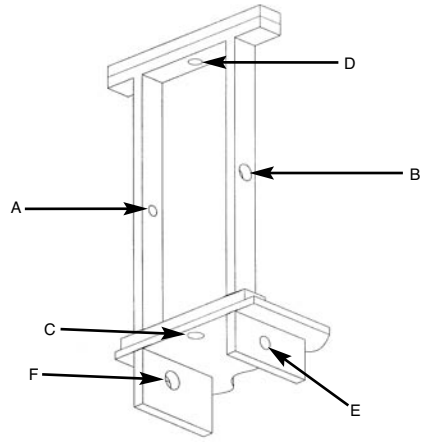

	A	B	C	D	E	F
CSST NORMAL SIZE INCH	2X4 Stud Load Bearing Wall (inch)	2X4 Stud Load Non-Bearing Wall (inch)	2X4 Sole Plate (inch)	2X4 Top Plate (inch)	2X6 Floor Joist (inch)	2X8 Floor Joist (inch)
MAX. HOLE SIZE	1.375	2.125	2.000	1.75.	1.75.	2.420
MAXIMUM TUBING SIZE	20M (3/4˝)	25M (1˝)	25M (1˝)	25M (1˝)	25M (1˝)	32M (1-1/4˝)

4.3.4 CONCEALED LOCATIONS FOR FITTINGS

General Provisions

The WARDFLEX® Mechanical Joint fittings and couplings have been tested and are listed per the requirements of ANSI/AGA LC-01-2005- CGA 6.26b-MO1 (USA & Canada). This specification provides test requirements which certify fittings for concealed locations and connections to appliances where accessibility is not possible.

Note: Tubing larger than 25A (1") in 2 x 4 wall cavities shall be protected for their entire length.

These guidelines address some of the known situations which may require the use of a concealed fitting. This guide cannot address all applications of concealed fittings but provides instead typical instructions to demonstrate the principles which apply to fittings listed for installation in concealed locations. Reference National Fuel Gas Code NFPA 54 or CGA B 149.1

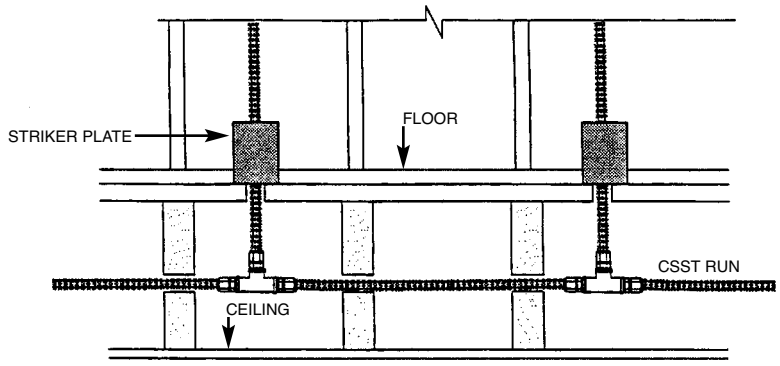

MULTIPLE OUTLETS ALONG MAIN TUBING RUN

Figure 4.2

Multiple Gas Outlets

When multiple gas outlets are supplied from single run of WARDFLEX®, each downstream outlet branch can be connected to the main run using a tee-type fitting which may be located in a concealed location as shown in Figure 4.2

Exclusions

- Prohibited locations: Piping shall not be installed in or through a clothes chute, chimney or gas vent, dumbwaiter or elevator shaft. For more information about prohibited locations, please refer to the National Fuel Gas Code.
- The termination fitting, as shown in Figure 4.1 are not listed for installation in concealed locations. The termination fitting shall be installed per WARD's instructions.
- Manifold stations, which include the multiport manifold and pressure regulator, shall not be installed in concealed locations regardless of the qualifications of the tubing fittings.
- Fittings installed inside accessible enclosure boxes, for such items as quick connect gas outlets or fireplace shut-off valves, are exempted from these guidelines.
- 38A and 50A are not to be installed in concealed locations where penetration threats exist.

4.3.5 OUTDOOR ISSUES

General Provisions

- WARDFLEX® Mechanical Joint Fittings shall be protected from the effects of weather when used out doors. After the connection is made to outdoor equipment the WARDFLEX® Mechanical Joint Fitting shall be sealed by wrapping two layers of tape (e.g. PVC, Silicone) or by applying shrink sleeves (e.g. PVC, Polyolefin).
- The following additional instructions regard the use of WARDFLEX® in systems in which portions of the piping are exposed to the outdoors as required to make connections to gas meters or gas appliances, which are attached to, mounted on, or located in close proximity to the building structure.
- In cases where conflicting requirements exist, the order of precedence shall be as follows:
  1 - Local Code
  2 - Manufacturer's Instructions
- The external protective covering shall remain intact as much as practical for the given installation.
- When installed along the side of a structure (between the ground and 6 ft.) in an exposed condition, the WARDFLEX® must be protected inside a conduit or installed in a location which will not subject it to mechanical damage.
- When installed in crawl spaces or underneath mobile homes, WARDFLEX® shall be installed in accordance with WARD's standard installation instructions. No special precautions are required beneath the structure.
- When using a termination plate for an outdoor application, all four mounting fasteners shall be used when installing the termination fitting.

Caution: When installing WARDFLEX® in brick or other applications where CSST may be exposed to an acid wash, shield the WARDFLEX® and/or ensure that all traces are removed to prevent premature corrosion failure!

4.3.6 Modifications to Installed Systems

New Ceilings in Unfinished Rooms/Basements

WARDFLEX® fittings originally installed in accessible ceiling locations can be concealed at a later date in the event that a ceiling is installed. Precautions shall be taken to ensure that the newly concealed fittings and tubing are adequately protected from accidental puncture in accordance with WARD MANUFACTURING'S instructions for the installation of protective devices.

Extensions to Existing Tubing Runs

A concealed tubing run may be modified to permit an extension of another appliance location provided there is sufficient capacity to safely supply both appliances at the same time. If an accessible location for the modification is not available, the existing tubing run can be modified as shown in Figure 4.3 which will result in a concealed fitting behind the wallboard.

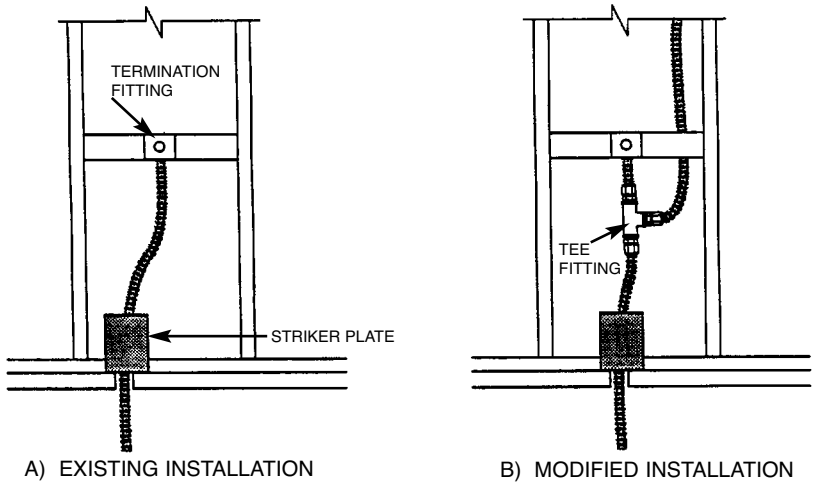

EXTENSION OF EXISTING TUBING RUN

Figure 4.3

4.4 PROTECTION

The tubing shall be protected from physical damage caused by screws, nails, drill bits, ect. The tubing is most susceptible to puncture at all points of support. The best practice is to install the tubing in those areas where testing has shown no protection is needed; for example:

- Where tubing is supported at least 3 inches from any outside edge of a stud, joist, etc. or wall surface.
- Where any unsupported tubing can be displaced in the direction of potential penetration at least 3 inches.
- Where tubing is supported under the joist in basements or crawl spaces and is not concealed by wallboard or ceilings.

When WARDFLEX® must be installed in locations where the potential of physical damage exists, the use of hardened steel striker plates, listed for use with CSST, must be used. Striker plates other than those provided for use with WARDFLEX® are prohibited.

In areas where penetration through studs, joists, plates, and other similar structural members occur striker plates are required when all of the following criteria apply:

1. When the piping system is installed in a concealed location and is not viewable.
2. When the piping system is installed in a location that does not allow free movement to avoid puncture threats.
3. When the piping system is installed within 3 inches of possible points of penetration.

4.4.1 STRIKER PLATES

For installation where all three of the above criteria apply the following striker plate protection must be applied:

- At concealed support points and points of penetration less than 2 inches from any edge of a stud, joist, plate, etc. shielding is required at the area of support and extending 5 inches in one or both directions. (Figure 4.5)

Figure 4.5

ELEVATION VIEW

LONG UNSUPPORTED TUBING RUNS (OVER 3 FT.) WITHIN AN INTERIOR WALL PARTITION

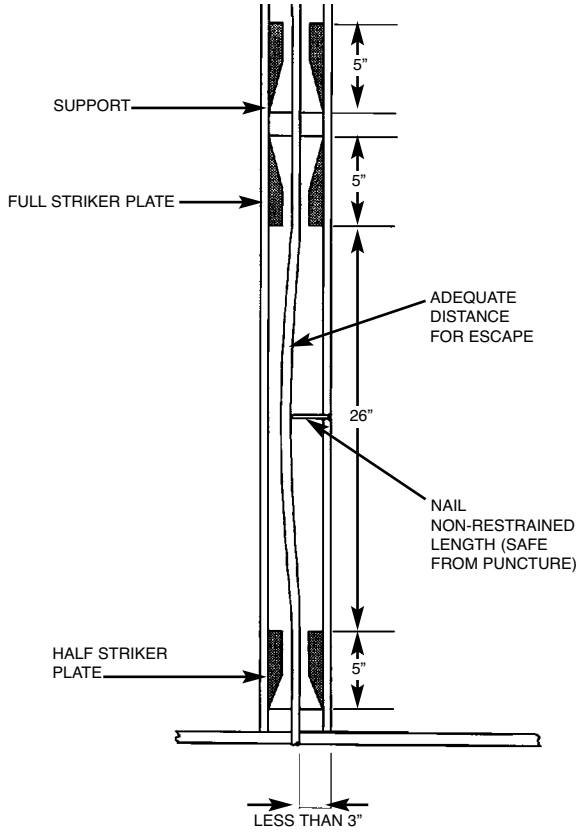

- At concealed support points and points of penetration 2 to 3 inches from any edge of a stud, joist plate, etc., listed ¼” striker plates are required to provide protection throughout the area of penetration.

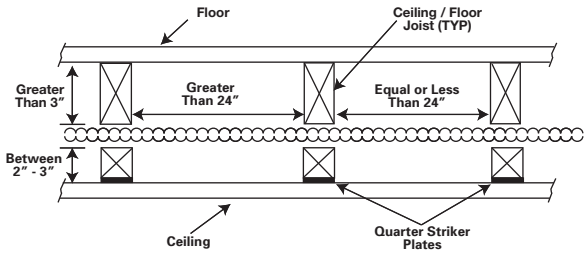

Figure 4.6

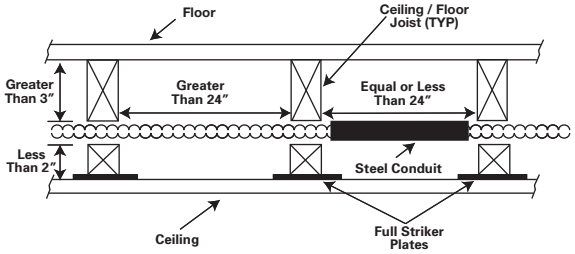

Figure 4.7

- Tubing routed horizontally through structural members shall be protected from puncture threats with the appropriate shielding material (Figure 4.6 and 4.7). At penetration joints, listed striker plates of the appropriate size shall be utilized. Tubing between constraints that are less than 24 inches apart and meeting the criteria requiring full striker plates, shall be additionally protected by Stripwound Metal Conduit, or Schedule 40 pipe.
- CSST greater than 1" nominal diameter installed within a concealed hollow wall cavity of 2"x4" construction shall be protected along the entire concealed run length with Stripwound Metal Conduit, or Schedule 40 pipe.
- At termination points not covered by the ANSI standard, floppy steel conduit (heavy wall) shall be installed as additional protection (Fig. 4-42 and 4-43). WARDFLEX® requires a minimum of six inches of conduit and supplies precut conduit in one foot lengths. Floppy Steel conduit should not be used in place of hardened steel striker plates when passing through structural members.

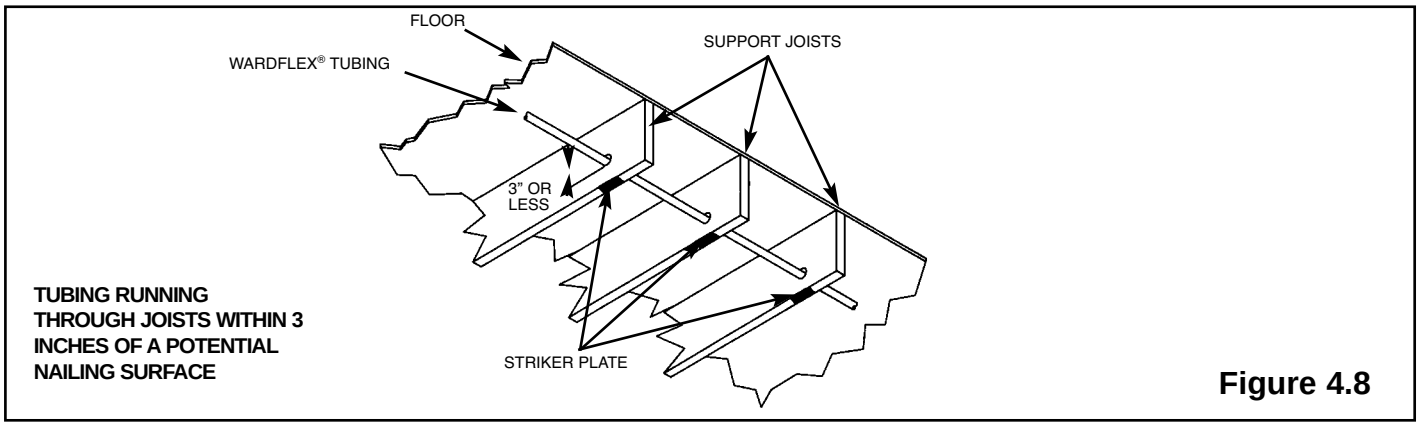

TUBING RUNNING THROUGH JOISTS WITHIN 3 INCHES OF A POTENTIAL NAILING SURFACE

Figure 4.8

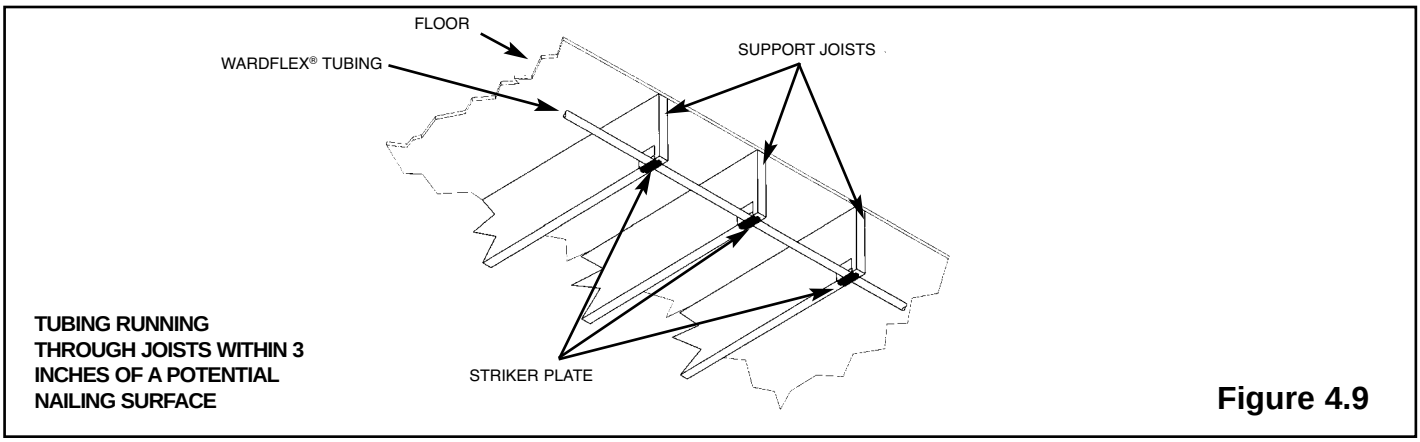

TUBING RUNNING THROUGH JOISTS WITHIN 3 INCHES OF A POTENTIAL NAILING SURFACE

Figure 4.9

Note: Should the basement ceiling be covered at a later date, the quarter striker plates (shown) should be replaced with full striker plates. Although Figures 4.8 and 4.9 are acceptable methods, Figure 4.10 is a preferred method of installation. This is included to cover installations such as finishing a basement where tubing needs to be moved up into joists.

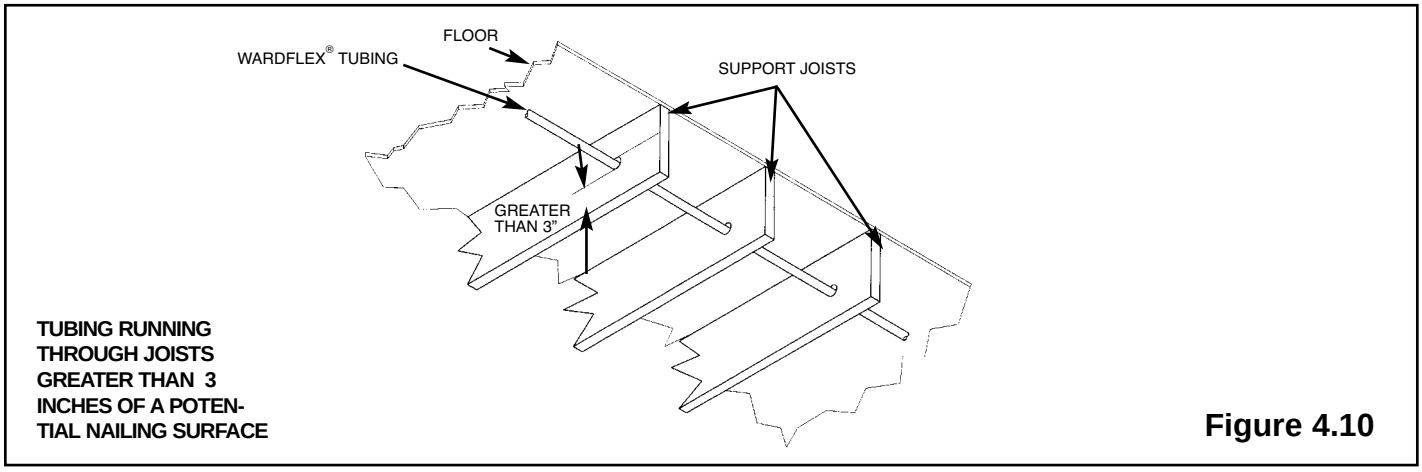

TUBING RUNNING THROUGH JOISTS GREATER THAN 3 INCHES OF A POTEN-TIAL NAILING SURFACE

Figure 4.10

Rigid (Foamed-in-Place) Insulation

Rigid Insulation Presents Significant Puncture Threats For WARDFLEX® Installations In Concealed Spaces

In concealed spaces, e.g. wall cavities, rigid insulation will prevent WARDFLEX® from being displaced. WARDFLEX® shall not be installed in a wall cavity with foam insulation without additional protection as described below.

- Tubing shall be routed through an approved conduit in walls where "foamed in" insulation is to be used i.e. rigid steel pipe or conduit. Approved conduit shall be secured according to local building practice.
- Protection methods such as pipe and conduit (or stripwound hose), supply protection and give the tubing space in which to move. On exterior walls the tubing may be fastened to the sheathing with cable clamps or secured with sticks/wires sprung between studs to center tubing between interior and exterior surfaces.
- WARDFLEX® tubing does not need additional protection where it is more than three inches for any puncture threats although consideration must be given to the chance that it may migrate toward penetration threats as the insulation is applied and during curing.

4.4.2 STRIPWOUND CONDUIT

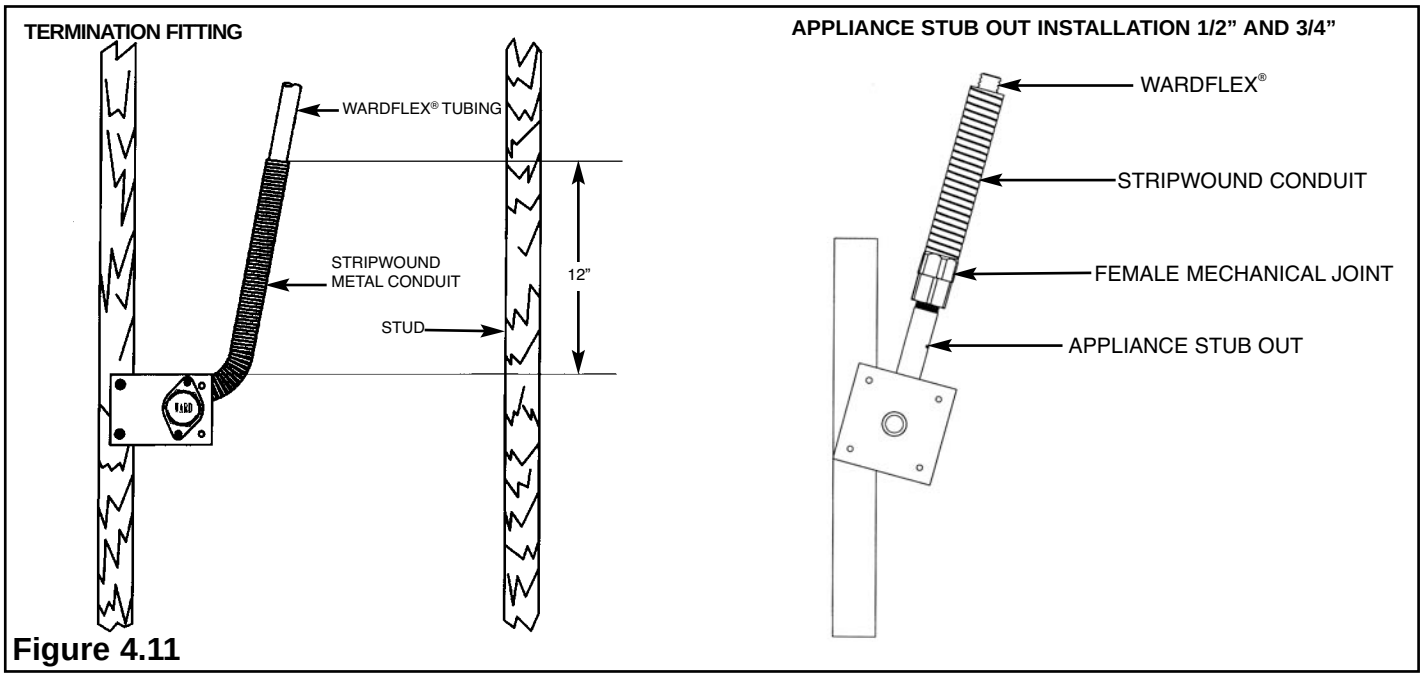

Figure 4.11

Shielding shall be installed along the entire length within the wall partition when the tubing cannot be displaced a minimum of 3 in. or if the distance between supports is less than 2 ft. On exterior walls no protection is required except as noted.
See also Figures 4.18, 4.19, 4.20.

In Figure 4.12, the entire length of tubing is protected from the bottom plate to the termination fitting.
Stripwound conduit is also run through the hanger for additional protection.

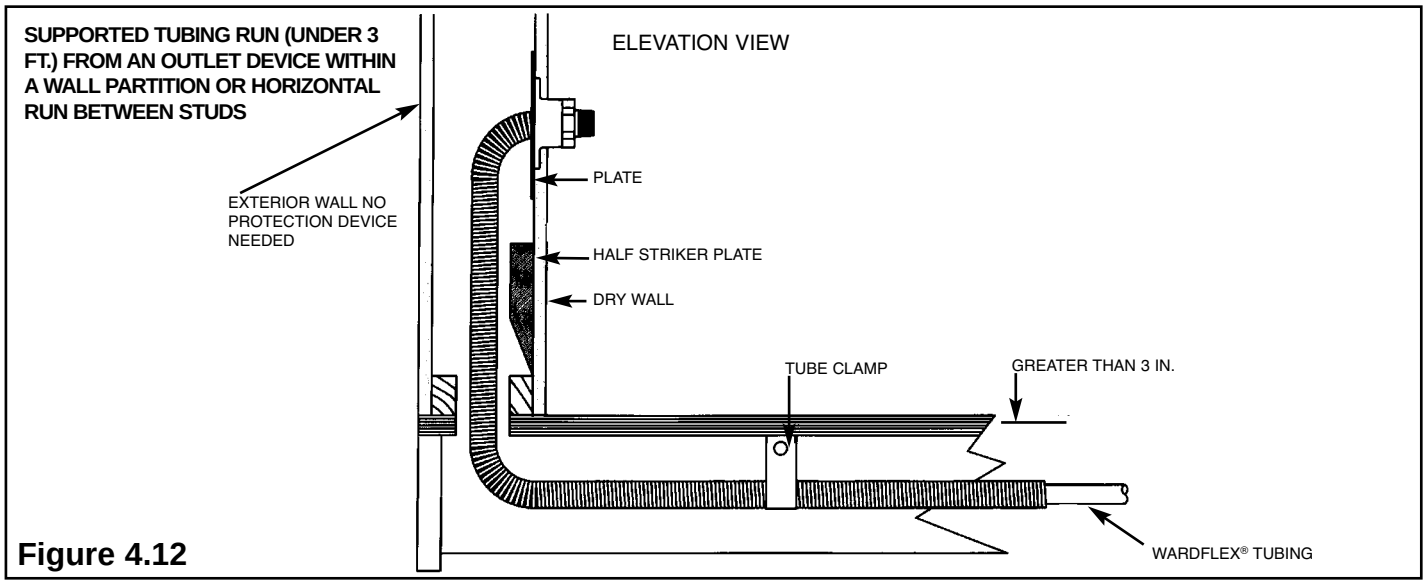

Figure 4.12

Shielding shall be installed when the tubing runs within 3 in. of a nailing surface such as the edge of a joist, stud, plate, etc. (Figures 4.8, 4.9, 4.11 & 4.12)

4.4.3 OUTDOOR INSTALLATIONS

WARDFLEX® may be used outdoors. Refer to sections 4.3.5 and 4.6.4.2.

4.4.4 FIRE STOPS • If the tubing passes through a fire stop seal both ends (See Figure 4.13).

TYPICAL INSTALLATIONS

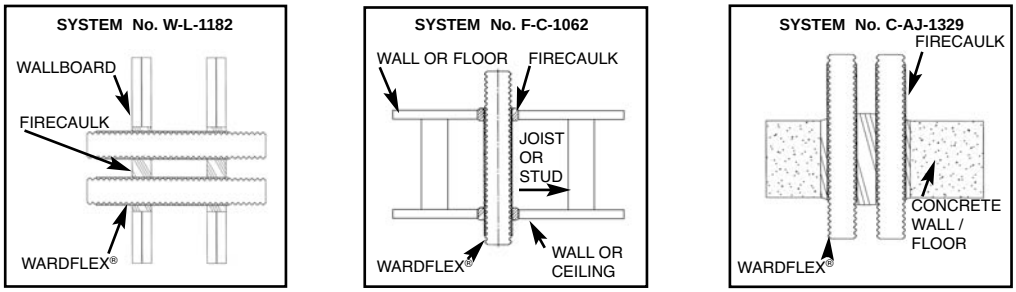

Figure 4.13

R18357 WARDFLEX® UL Through Penetrating Firestop Listings

System No.	Rating hr		Firecaulk Product	Remove Covering	Max Size	Max Quantity
	F	T				
C-AJ-1217	3 and 4	0	5		2	1
C-AJ-1225	2	0	1	R	2	1
C-AJ-1240	2 and 3	0	6		3	1
C-AJ-1327	3	2 and 3	2		1-1/4	1
C-AJ-1328	3	2 and 3	3		1-1/4	1
C-AJ-1329	3	2	2		1-1/4	3
C-AJ-1330	3	2	3		1-1/4	3
C-AJ-1346	2	0	9		1	1
C-AJ-1353	3	0	4		2	1
C-AJ-1354	2	0	4		2	>1
C-AJ-1427	2	0	7		1	1
C-AJ-1428	2	0	7		1	1
C-AJ-1429	2	0	7		1	>1
C-AJ-1437	3	2 and 3	8		1-1/4	1
C-AJ-1438	3	2	8		1-1/4	3
F-C-1029	1 and 2	1	1	R	2	1
F-C-1055	1	1	2		1	1
F-C-1056	1	1	3		2	1
F-C-1061	1/4 and 1	1/4 and 1	2		1-1/2	1
F-C-1062	1/4 and 1	1/4 and 1	3		1-1/2	1
F-C-1063	1 and 2	1 and 2	2		1-1/4	1
F-C-1064	1 and 2	1 and 2	3		1-1/4	1
F-C-1065	1 and 2	1 and 2	2		1-1/4	3
F-C-1066	1 and 2	1 and 2	3		1-1/4	3
F-C-1074	1 and 2	1/4, 1/2 and 1	4		2	1
F-C-1075	1 and 2	1/4, 1/2 and 1	4		1	>1
F-C-1077	1	1	8		1-1/4	1
F-C-1078	1	1/4 and 1	8		1-1/4	1
F-C-1079	1 and 2	1 and 2	8		1-1/4	1
F-C-1080	1 and 2	1 and 2	8		1-1/4	3
F-C-1094	1	1/4	7		1	1
F-C-1095	1	3/4	7		1	1
F-C-1002	1	1	4		2	1
F-C-1003	1	1	4		1	>1
F-C-1009	1	1/4	7		1	1
F-C-1010	1	3/4	7		1	1
F-C-1079	1 and2	1 and2	8		1-1/4	1
F-C-1080	1 and2	1 and2	8		1-1/4	3
F-C-1094	1	1/4	7		1	1
F-C-1095	1	3/4	7		1	1
F-E-1002	1	1	4		2	1
F-E-1003	1	1	4		2	>1
F-E-1009	1	1/4	7		1	1
F-E-1010	1	3/4	7		1	1
W-J-1079	2	2	2		1-1/4	1
W-J-1080	2	2	3		1-1/4	1
W-J-1081	2	2	2		1-1/4	3
W-J-1082	2	2	3		1-1/4	3
W-J-1098	2	1	4		1-1/4	1
W-J-1099	2	1	4		2	1
W-J-1101	2	1	4		2	>1
W-J-1104	2	1	8		1-1/4	1
W-J-1105	2	2	8		1-1/4	3
W-J-1022	2	1/4	7		1	>1
W-J-1027	2	1/4	7		1	1
W-L-1001	VARIES	VARIES	1		1	
W-L-1096	2	0	1	R	2	1
W-L-1179	1 AND 2	1 AND 2	2		1-1/4	1
W-L-1180	1 AND 2	1 AND 2	3		1-1/4	1
W-L-1181	1 AND 2	1 AND 2	2		1-1/4	3
W-L-1182	1 AND 2	1 AND 2	3		1-1/4	3
W-L-1199	1 AND 2	1 AND 2	2		1-1/4	1
W-L-1200	1 AND 2	1 AND 2	3		1-1/4	1
W-L-1222	1	1/4, 3/4 & 1	4		1-1/4	1
W-L-1223	1	1	4		2	1
W-L-1224	1	2	4		2	>1
W-L-1241	1 AND 2	1 AND 2	8		1-1/4	3
W-L-1243	1 AND 2	0	9		1	1
W-L-1287	1 AND 2	0 AND 1/4	7		1	>1
W-L-1295	1 AND 2	1 AND 2	8		1-1/4	1
W-L-1296	1 AND 2	0 AND 1/4	7		1	1

System No. explanations: First alpha: F=floor is being penetrated, W=wall, C=walls or floors, E=Floor-ceiling assemblies consisting of concrete with membrane protection Second alpha: A=concrete floors with a minimum thickness less than or equal to 5 inches, C= framed floors, J=concrete or masonry walls with a minimum thickness less than or equal to 5 inches, L= framed walls. Rating hours: F= flame passage criteria, T= temperature rise of 325°F. Firecaulk Products: 1 Minnesota Mining & Mfg: CP-25-WB+, 2 Rectorseal: Metacaulk 1000, 3 Rectorseal: Biostop 500+ caulk, 4 Specified Technology: SpecSeal LCI sealant, 5 Specified Technology: SpecSeal 100, 101, 102, 105, 120 or 129, 6 Specified Technology: SpecSeal 100, 101, 105, 120 or 129 Sealant, SpecSeal LC 150, 151, 152or 155 Sealant may be used for 2 hr F Rating only. 7 3M COMPANY: IC 15WB, 8 EGS NELSON FIRESTOP: LBS+, 9 HILTI INC: FS-ONE Sealant Consult UL Fire Resistance Directory-Volume 2 for specific construction details or contact WARD MANUFACTURING These can be downloaded directly from UL's web site: http://database.ul.com/cgi-bin/XYV/cgifind.new/LISEXT/1FRAME/srchres.html

4.5 METER HOOK-UPS

4.5.1 SPECIAL TUBING TERMINATION

- Meters which depend on the service and house piping for support shall not be directly connected outdoors with WARDFLEX®.
  As shown in Figures 4.14 & 4.15, steel pipe shall be used to connect the meter outlet to an Outdoor Termination Fitting, the exterior wall of the structure or to a transition from pipe to WARDFLEX® located inside the structure.

4.5.2 DIRECT CONNECTION

- Meters which are independently supported with a bracket may be directly connected outdoors with WARDFLEX® as shown in
  Figure 4.16. If practical, direct connections shall include a 3 to 6 in. loop of tubing to accommodate differential settling and meter movement.
- No mechanical protection is required for outdoor meter connections higher than 6 ft.
  NOTE: Consult local code authority.

METER CONNECTION -PIPE SUPPORTED METER

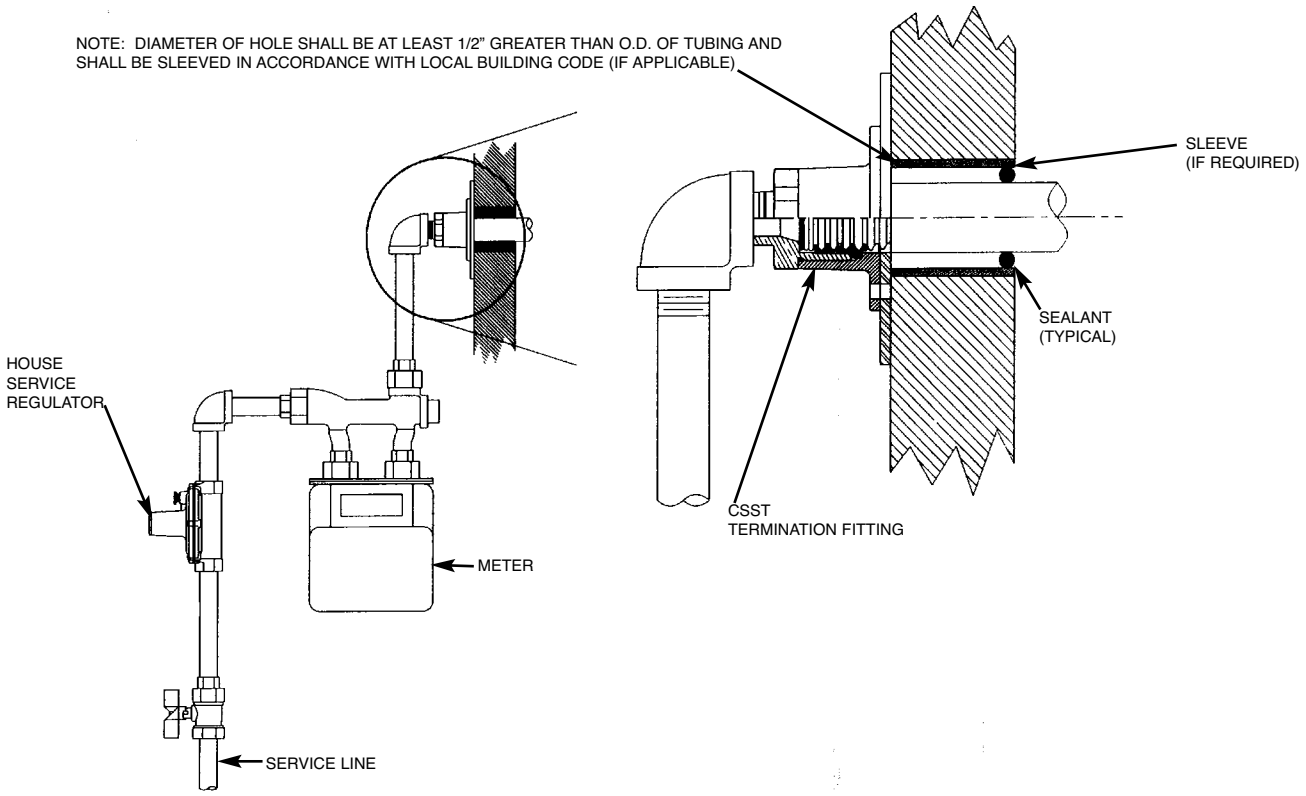

Figure 4.14

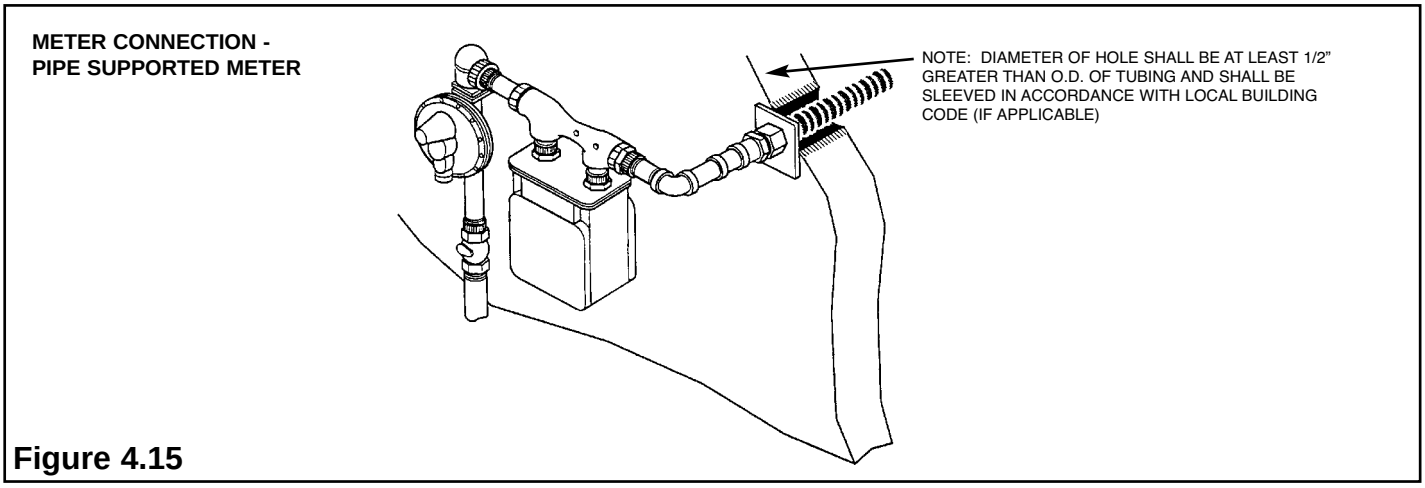

Figure 4.15

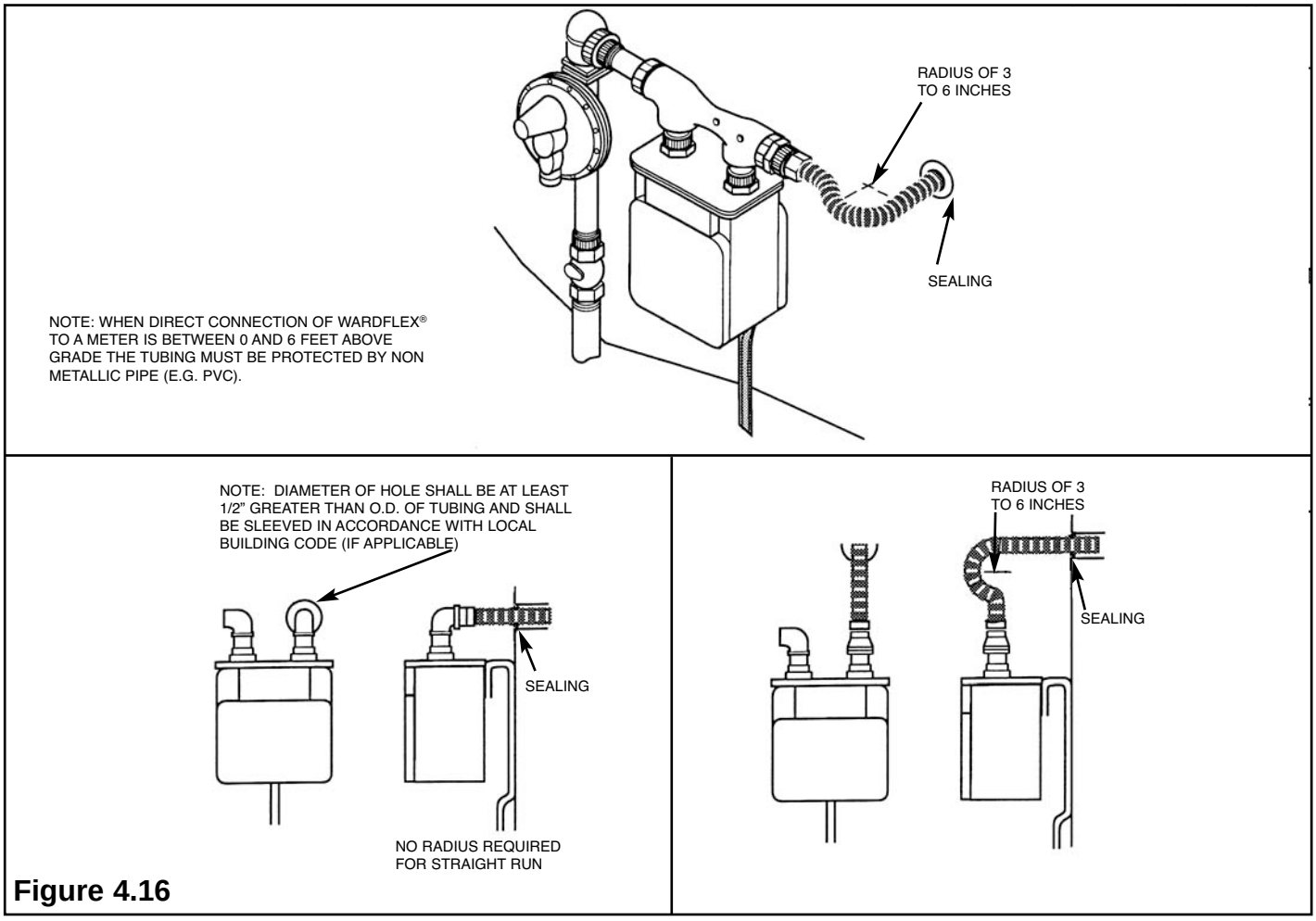

Figure 4.16

4.6 APPLIANCE CONNECTIONS

The termination fittings shall be securely fastened in place during rough installation. Figure 4.17 presents three mounting methods for the termination fittings. These methods shall be used for both fixed and moveable appliances. For fixed appliances, the tubing shall terminate at the gas appliance shut-off valve. The tubing must be routed through a stripwound conduit which passes through the wall board (See Figure 4.18).

Each termination, including a valve or tubing fitting, shall be capped immediately after installation and uncapped when the gas equipment is connected. This allows for pressure testing after rough installation.

4.6.1 TERMINATION FITTINGS FOR APPLIANCE CONNECTOR

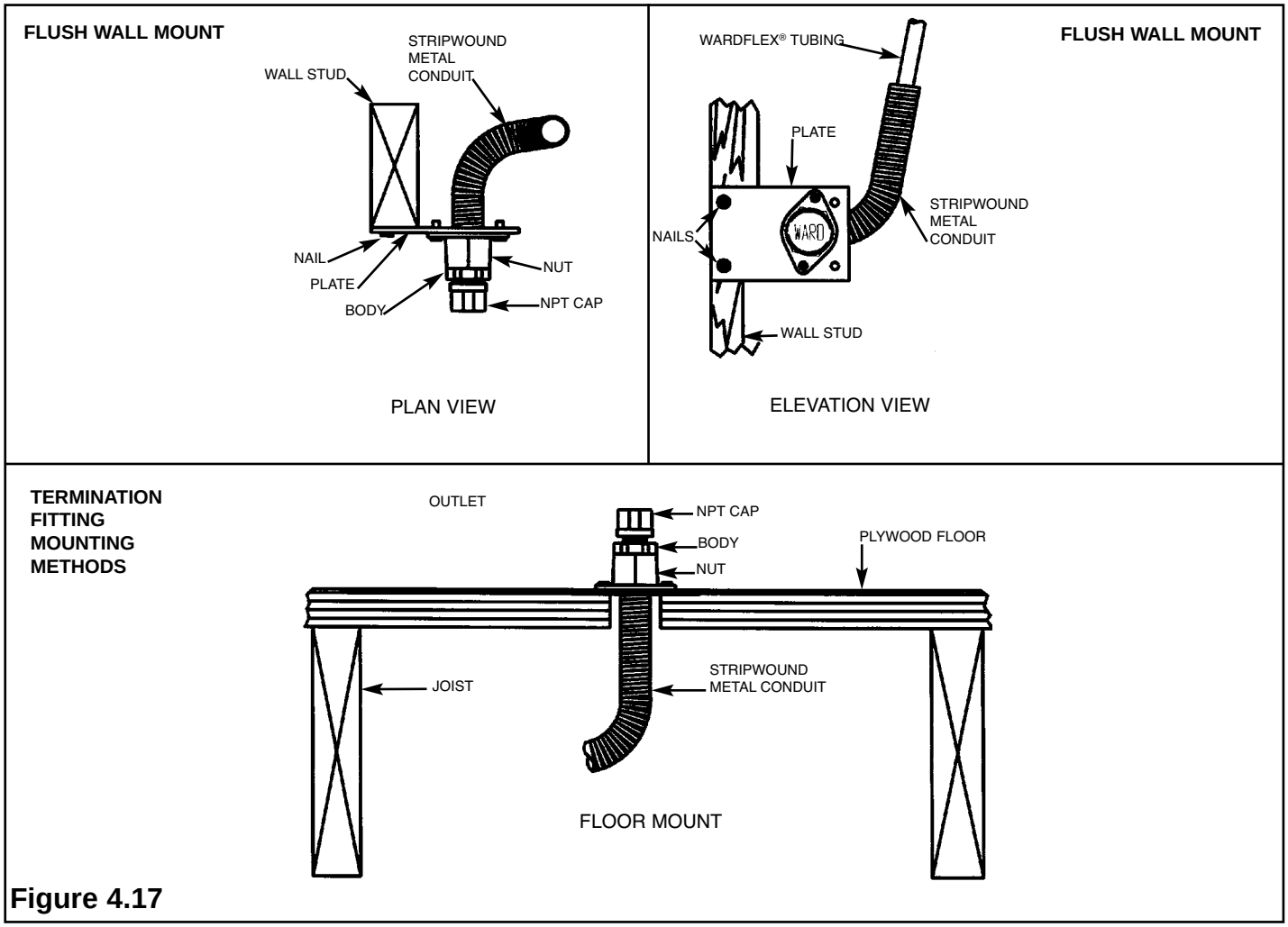

Figure 4.17

4.6.2 DIRECT CONNECTION

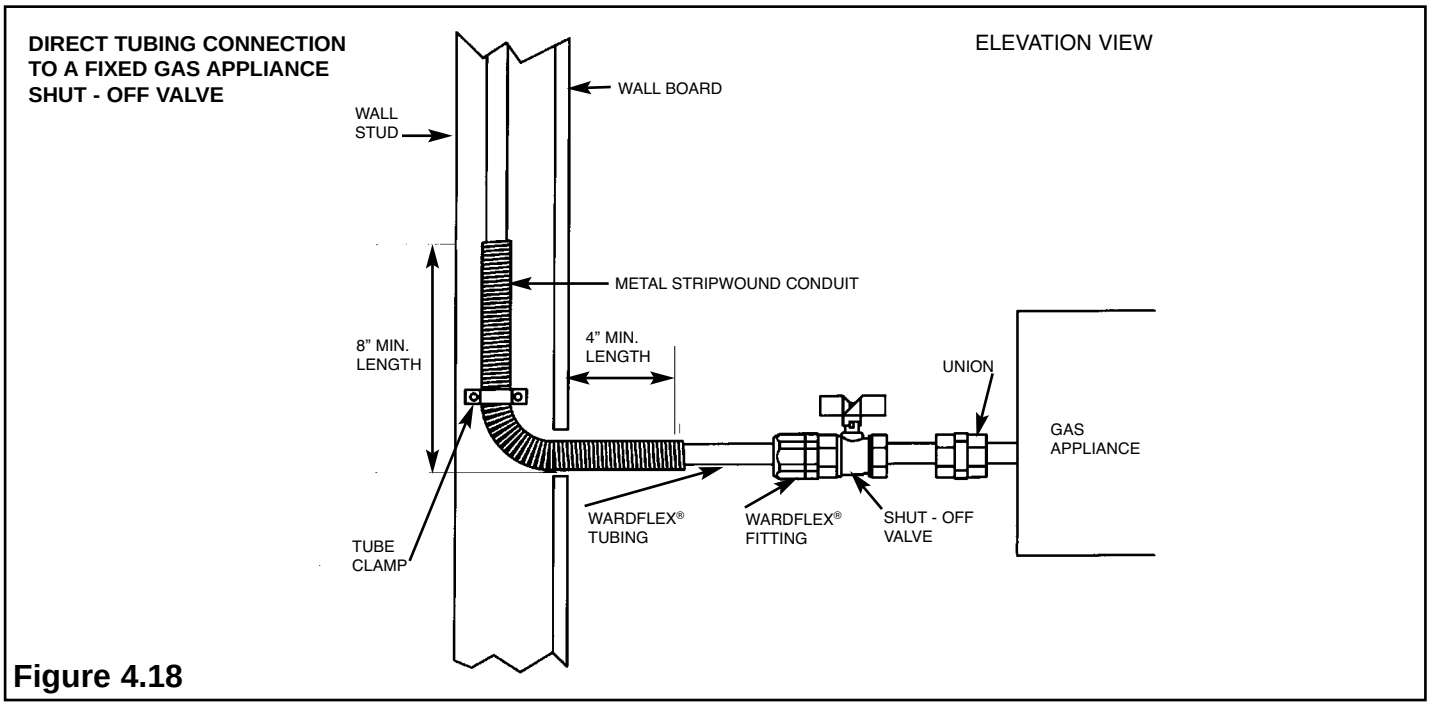

Figure 4.18

4.6.3 GAS CONVENIENCE OUTLET

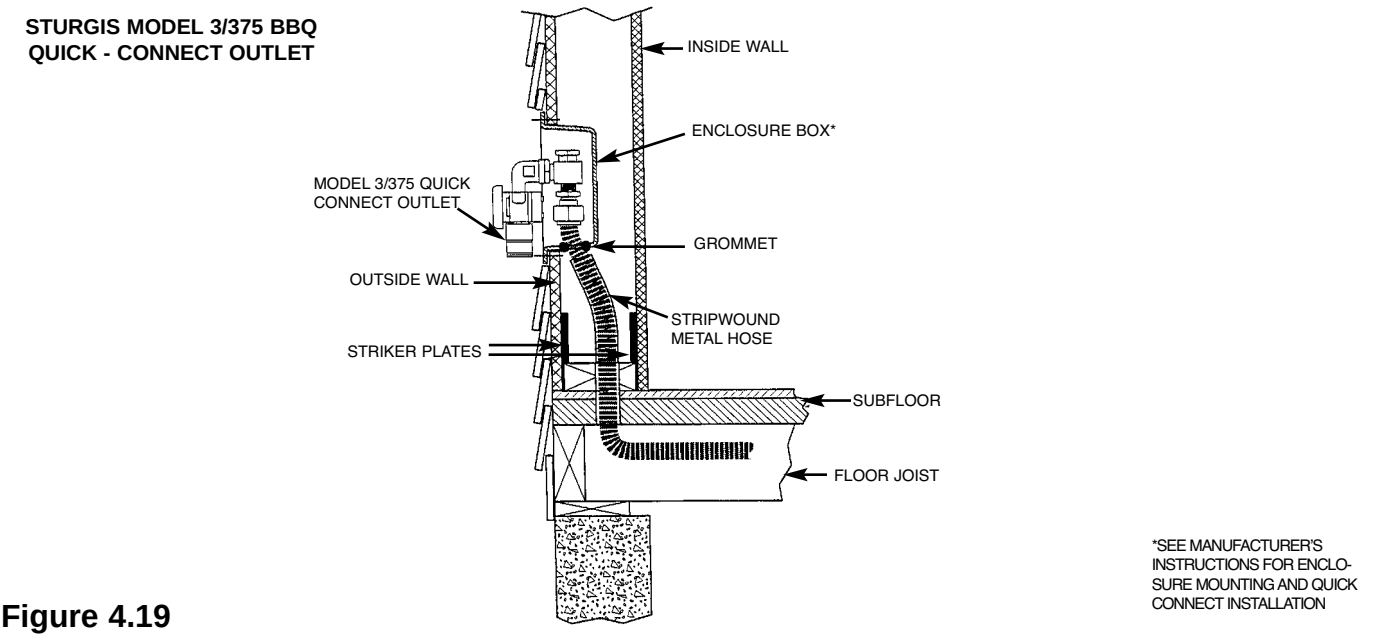

Figure 4.19

4.6.4 SPECIAL APPLICATIONS

4.6.4.1 Roof Top Units

- No special mechanical protection of the tubing is required for connections to roof top equipment. Whenever possible, roof penetrations shall include an outdoor termination fitting and shall be located within 6 ft. of the equipment to be connected as shown in Figure 4.21. Long runs of tubing shall be supported with nonmetallic blocks every 4 ft. along its outdoor length, and raised above the roof (as shown in Figure 4.20) a distance determined by local code/practice.
- "Roof penetrations shall be sealed against weather conditions according to good building practices"
- WARDFLEX® routed vertically up the side of a building to the roof shall be protected in accordance with the general provisions of this manual, section 4.3.5,.

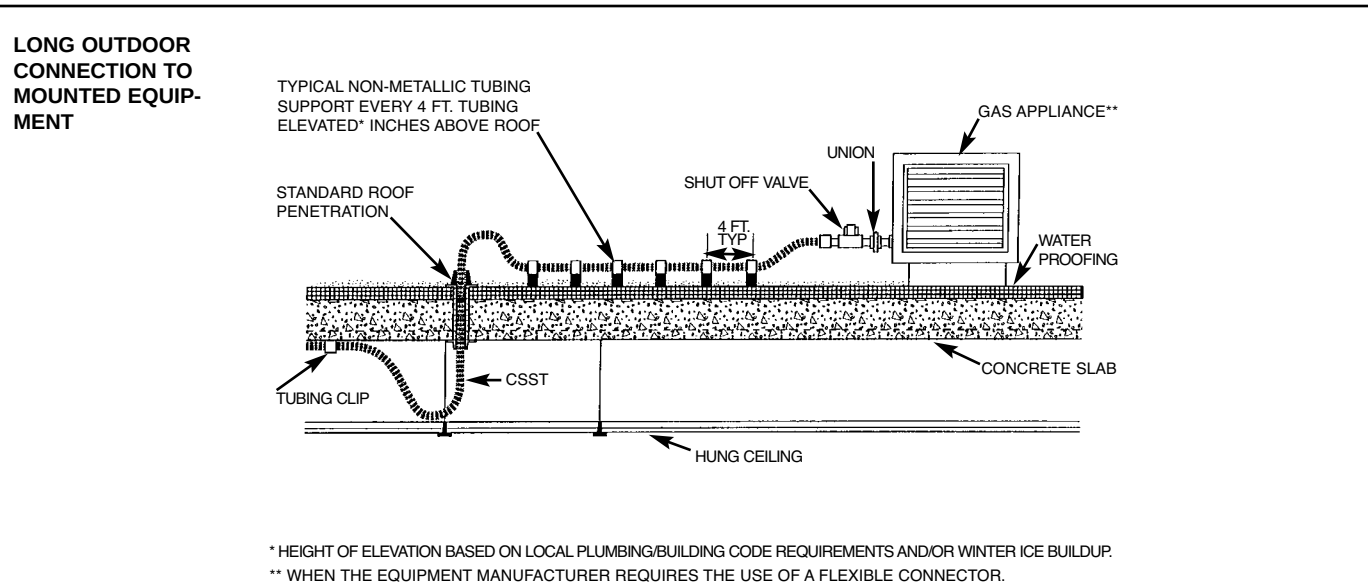

Figure 4.20

SHORT (1 TO 6 FT.) OUTDOOR CONNECTION TO ROOF MOUNTED EQUIPMENT

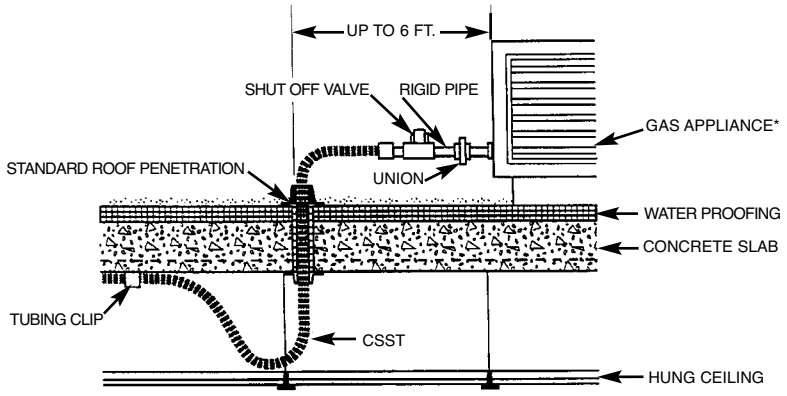

*WHEN THE EQUIPMENT MANUFACTURER REQUIRES THE USE OF A FLEXIBLE CONNECTOR

Figure 4.21

4.6.4.2 OUTDOOR APPLIANCES

Lights

- Permanently mounted lights located on decks shall be connected to the WARDFLEX® system the same as permanently mounted grills as shown in Figure 4.23 and in accordance with the manufacturer's instructions.
- Yard mounted lights shall be connected to the WARDFLEX® system as shown in Figure 4.23. All WARDFLEX® installed below grade shall be protected by nonmetallic conduit. Exposed ends shall be sealed against water entry from entering by wrapping two layers of tape (e.g. PVC, Silicone) or by applying shrink sleeves (e.g. PVC, Polyolefin).

Barbeque Grills

- Movable grills shall be connected using an approved out door appliance connector which shall be attached to the WARDFLEX® system at either a termination fitting as shown in Figure 4.23, or a quick-connect device, such as the M.B.Sturgis Model 3/375 shown in Figure 4.19. The M.B. Sturgis Model 3/375 outlet shall be installed in accordance with the manufacturer's instructions.
- Permanently mounted grills located on decks shall be connected to the WARDFLEX® system as shown in Figure 4.22 and in accordance with WARD MANUFACTURING instructions. The outdoor portion of the WARDFLEX® shall be supported against the side of any of the inside deck joists. If the elevation of the deck is below the top of the foundation, any exposed WARDFLEX® shall be protected using conduit.

ELEVATED DECK- A FIXED PEDESTAL MOUNT GRILL OR GAS LIGHT - DIRECT CONNECTION

SECTIONAL VIEW

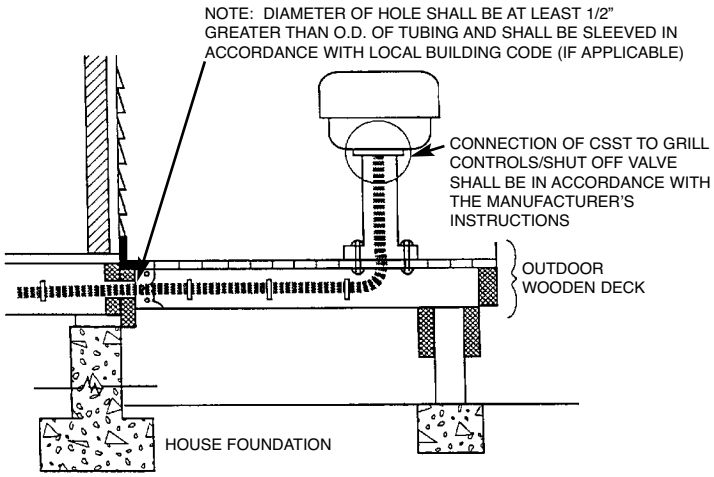

NOTE: CSST SHALL BE INSTALLED ONLY ON INSIDE SURFACES OF JOISTS AT THE CENTERLINE

Figure 4.22

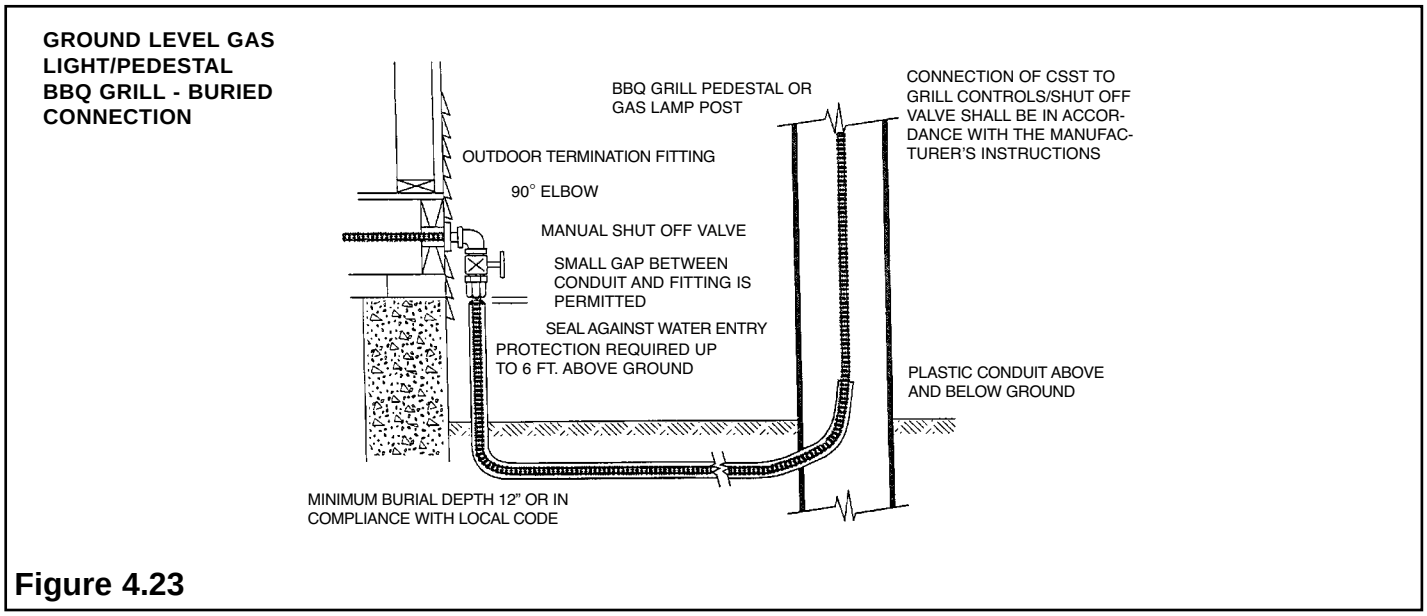

Figure 4.23

Infrared Heaters

- Infrared heaters mounted from ceilings and from walls of structures shall be connected to the WARDFLEX® system as shown in Figure 4.24, and in accordance with WARD's instructions.

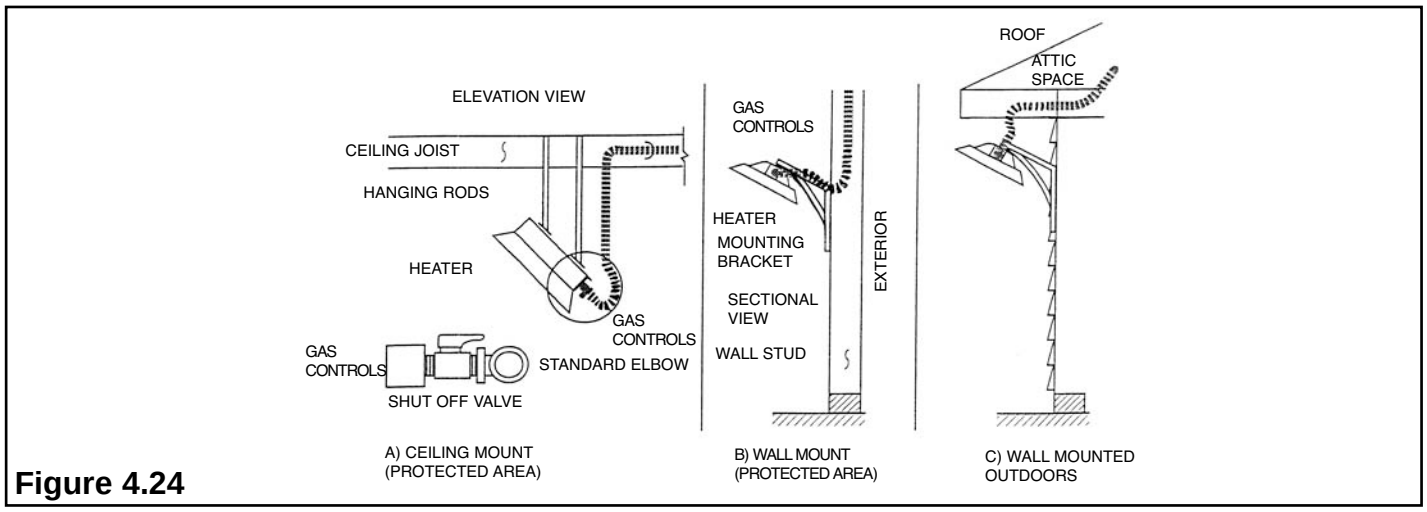

Figure 4.24

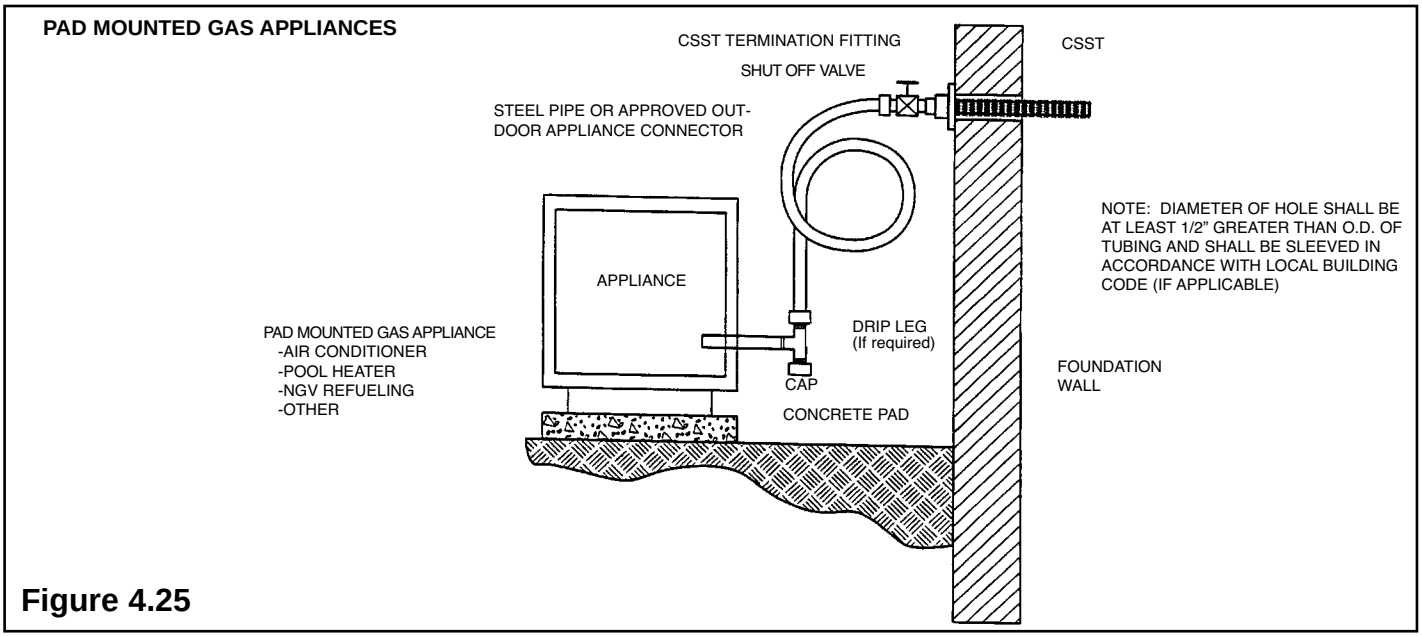

Figure 4.25

Pad Mounted Equipment

Gas appliances mounted on concrete pads or blocks, such as heat pumps, air conditioners, pool heaters and NGV refueling systems, shall be connected to the WARDFLEX® system at a termination fitting using either rigid pipe or an approved outdoor appliance connector as shown in Figure 4.25. Pad mounted equipment (in most cases) is considered "fixed" if not moved for cleaning, maintenance, etc. (i.e. A/C units).

4.6.4.3 FIREPLACE APPLIANCES

The connection to a valve controlling gas flow to a fireplace appliance may be concealed when installed as shown in Figure 4.26. The concealed tubing fitting can be installed beneath the floor, or hearth, or inside the brickwork of the fireplace. WARDFLEX® tubing and fittings shall not be installed inside the firebox for connection of log lighters or gas wands.

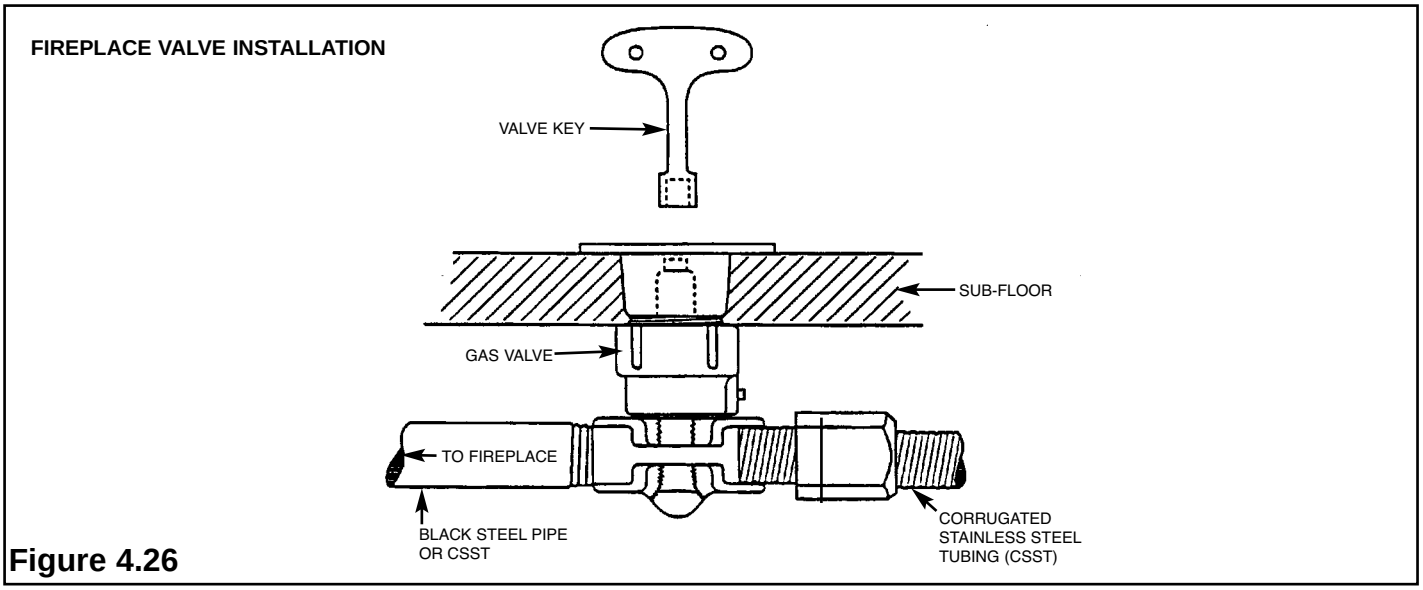

Figure 4.26

Use Of WARDFLEX® In Decorative Gas Appliances

(ANSI Z21.11.1 Gas Fired Room Heaters, vented and unvented)

(ANSI Z21.11.2 Gas Logs)

(Z21.44 Gas-Fired Gravity and Fan Type Direct Vent Wall Furnaces)

(ANSI Z21.50 Vented Decorative Gas Appliances)

(Z21.60 Decorative Gas Appliances for Installation in Vented Fireplaces)

WARDFLEX® is permitted to be used with:
Factory-Built, pre-assembled fireplaces
Fireplace inserts
Gas logs within factory-built pre-assembled fireplaces or fireplace inserts
Gas log units in permanently altered fireplaces for use with fuel gases

Permanently altered fireplaces must have the gas log unit anchored to the floor of the firebox and display the following warning:

WARNING: This fireplace has been altered to accommodate an insert and should be inspected by a qualified person prior to re-use as a conventional fireplace

- In wood burning fireplaces with non-permanent, retrofit gas log units, WARDFLEX® is not permitted within the fireplace cavity but may be terminated at the wall with a termination fitting.
- **WARDFLEX® shall not be used with log lighters or gas wands in fireplaces burning wood.**
- WARDFLEX® may be routed through the fireplace wall but must terminate at the interior surface with a termination fitting or be connected to hard pipe outside the firebox. See Figure 4.27.
- **Connections may be made through the back, left or right sides as appropriate.** Knockouts are normally provided for this purpose. Consult the manufacture's installation instructions for knockout locations and any specific instructions.

See Figure 4.28.

- **Consult the manufacturer's instructions or local code officials for special requirements.** Some units supply 1/8 NPT pressure tap connections and others require them to be supplied by the installer. Where required, a sediment trap, typically 3", may need to be installed upstream of the unit to prevent moisture or contaminants from passing through the pipe to the controls and burner.

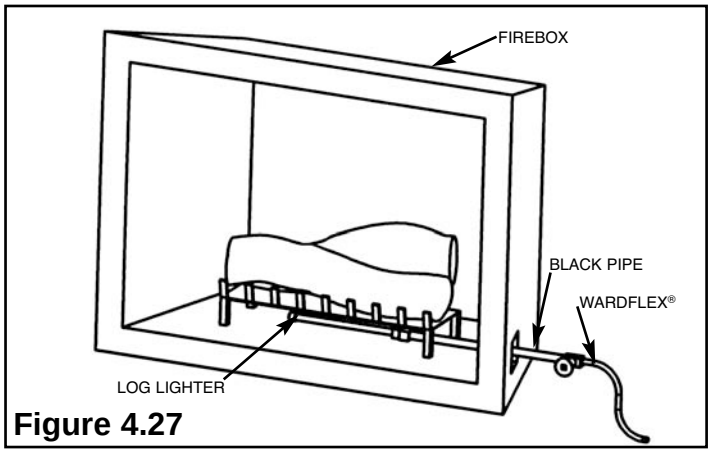

Figure 4.27

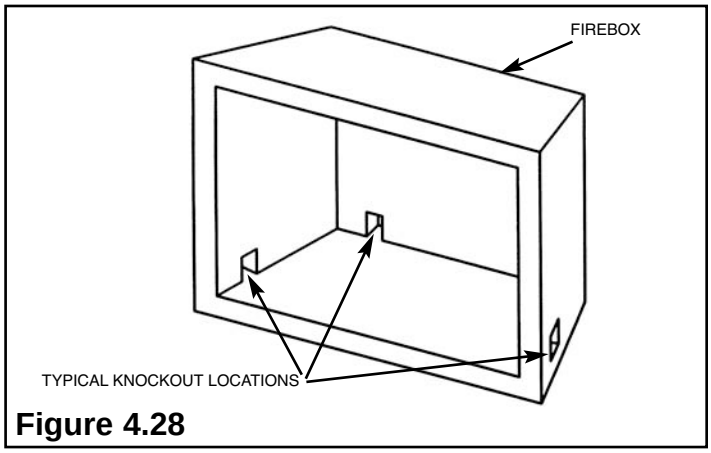

Figure 4.28

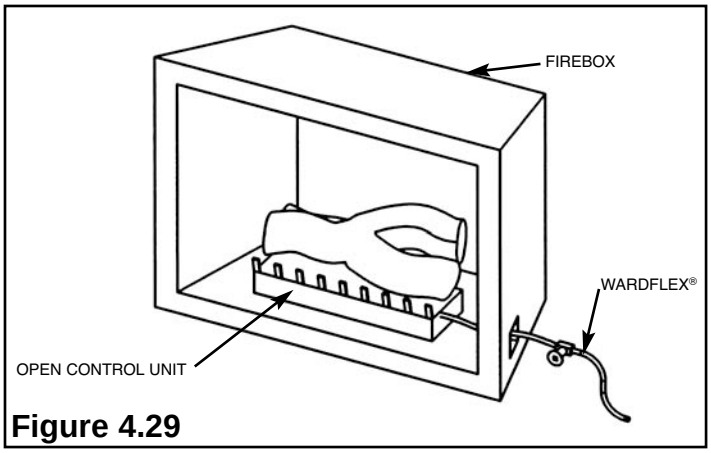

Figure 4.29

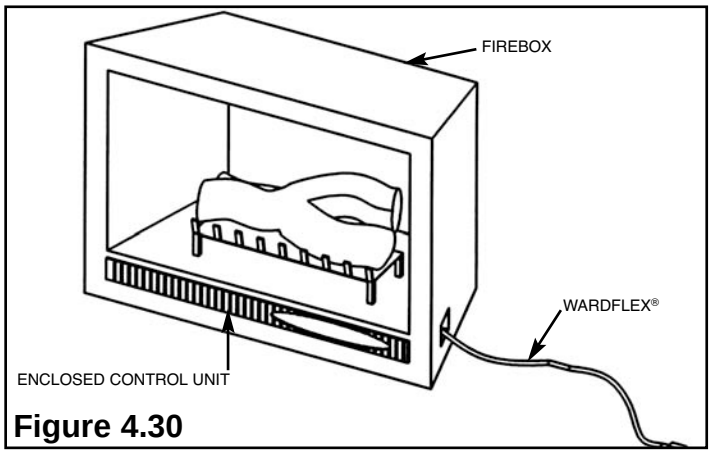

Figure 4.30

- Typically a shutoff valve is located outside the unit. Consult local regulations or the National Fuel Gas Code. WARDFLEX® may be installed from the shut off valve to the burner unit in factory built fireplace units or fireplace inserts in accordance with the manufacturer's instruction.
- **WARDFLEX® may be directly connected to the controls beneath the gas logs in accordance with the manufacturer's instructions.** (See Figures 4.29 and 4.30). Use care when connecting WARDFLEX® directly to a control unit to avoid damaging the controls.
- **WARDFLEX® may be concealed** and may be used with flush mounted, key operated gas valves (See Figure 4.26) mounted in floors, walls, or the fireplace structure where hard piping is difficult. Commercial valves are available specifically for this service.
- Precaution must be taken to avoid any direct flame contact or hot metal with WARDFLEX® CSST tubing.
- Remove the yellow jacket inside the firebox to improve appearance and preclude any smoke or gas from heat.
- Where WARDFLEX® penetrates the firebox of a factory built unit clearance shall be maintained around the tubing and the tubing shall be protected against sharp edges with a grommet, caterpillar strip (electrical supply stores), conduit bushing, or other methods. (Figure 4.31)
- Where WARDFLEX® penetrates a masonry structure, a sleeve must be placed around the tubing.

- If acceptable to the local jurisdiction, WARDFLEX® may be routed into a converted masonry fireplace through the ash pit.
- Some units supply or stipulate an AGA certified "flexible appliance connector". DO NOT SUBSTITUTE WARDFLEX®. ***WARDFLEX® is not rated as a flexible appliance connector.*** However, if copper tubing is supplied, WARDFLEX® may be piped directly to the unit's connection within the unit. Care should be taken to hold the regulator from moving while installing the connection.

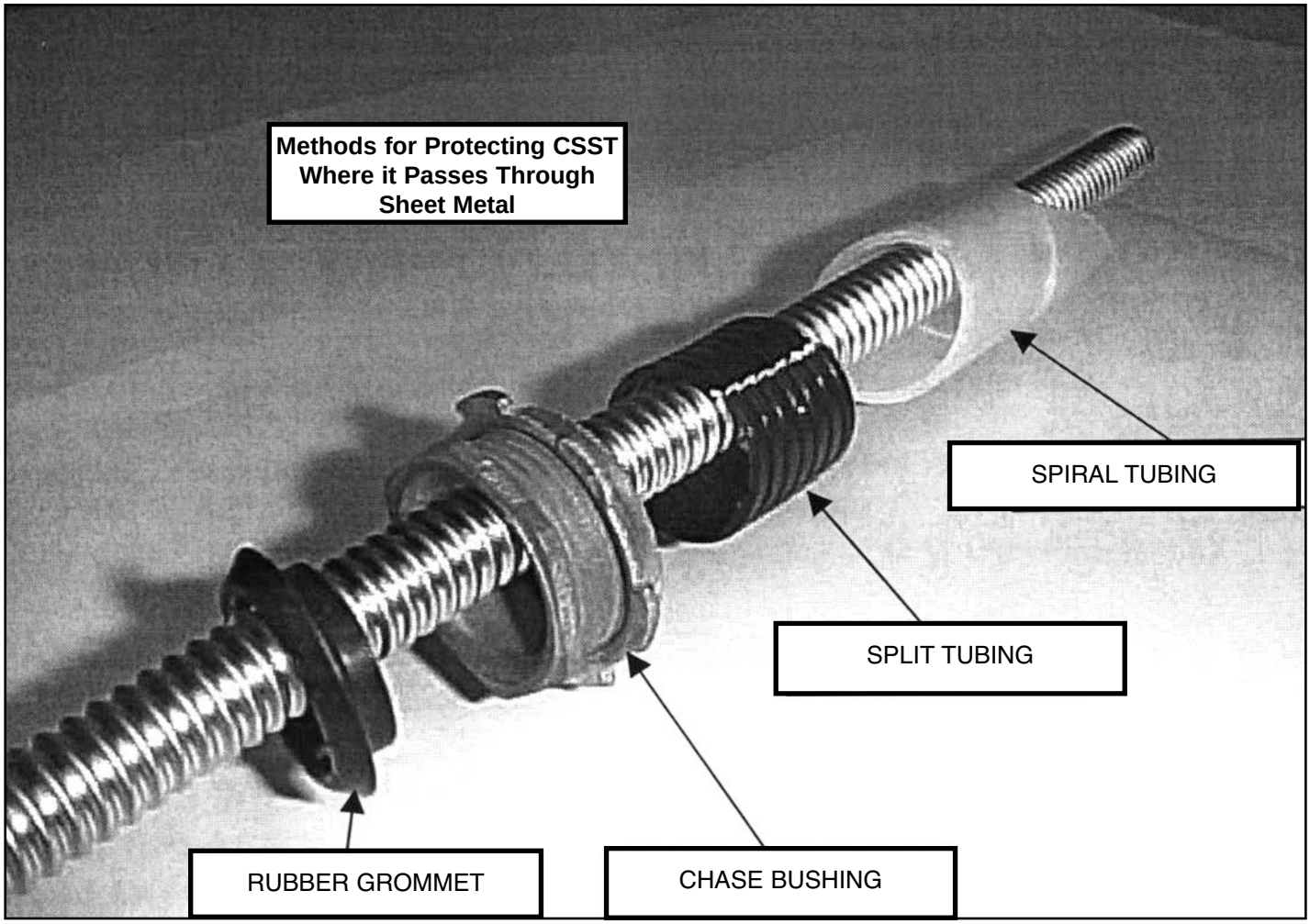

Figure 4.31

4.7 MANIFOLD STATIONS

Branching

- Avoid branching if possible. This minimizes the number of joints in the system. Instead, install individual runs to each appliance outlet.
- When branching is necessary, use a standard WARD NPT Class 150 malleable iron tee, or the WARDFLEX® mechanical tee, the outlets of which can be connected to suitable sizes of WARDFLEX® tubing.
- One manifold is used in most home applications. If separate metering is provided for multifamily units, each apartment should have its own manifold. More than one distribution manifold should be used when the household gas loads are either extremely large, or separated by large distances.

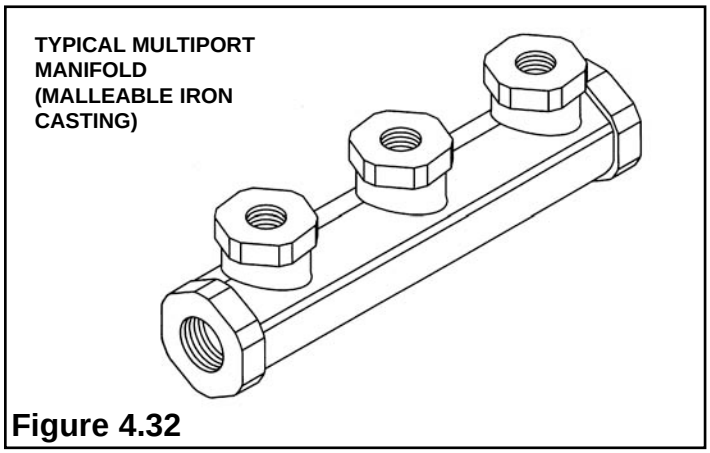

Figure 4.32

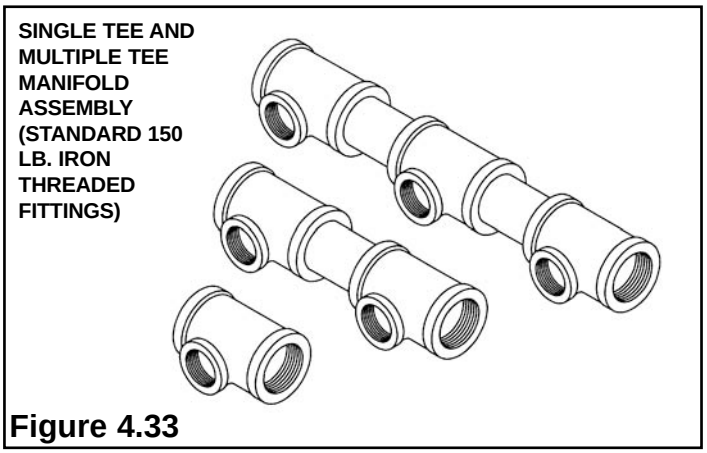

Figure 4.33

- The manifold shall be installed in combination with a pressure reducing regulator and upstream shut-off valve on elevated pressure systems (see Figure 3.4).
- Regulator manifold assemblies shall be installed in an accessible location.
- To reduce pressure loss and minimize tubing length, install the manifold at a location close to where the highest load appliances are located. For example, in a utility or mechanical room where a furnace and water heater are located.
- An optional shut-off valve may be installed at each unused manifold port to provide for future expansion. Several manifold configurations and mounting arrangements are possible. Available space will determine where the manifold will be mounted. For example: interior walls or partitions, between floor joists, or in an attic.

Single tee manifold with regulator, vent limiting device and shut-off valve serving two appliances from a 2 PSIG system. Pressure regulator may be mounted as shown with a vent line installed (see Figure 4.34).

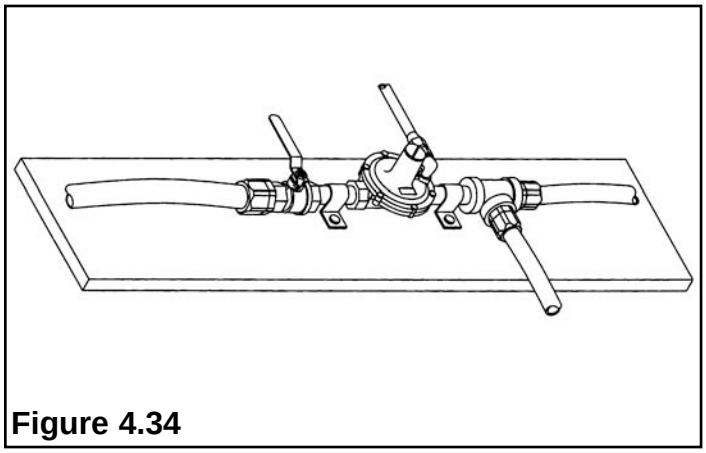

Figure 4.34

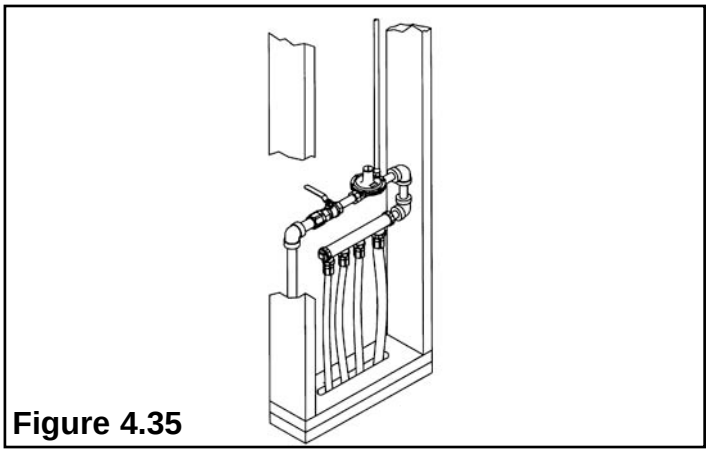

Figure 4.35

Malleable iron manifold with regulator, vent line and shut-off valve servicing four appliances from a 2 PSIG system. Manifold and regulator assembly are mounted within the wall partition with an access panel (see Figure 4.33).

4-Port malleable iron manifold servicing two appliances from low pressure system. Manifold assembly may be mounted in an approved metal cabinet (see Figure 4.36).

- Use an accessible, CSA Design Certified shut-off valve ahead of the line regulator and also at each appliance (See Figure 4.43). If the line regulator serves only one appliance and the shut-off valve and regulator are near the appliance, it is usually unnecessary to install a second shut-off valve. A shut-off valve is not required ahead of a manifold supplying gas less than 1/2 PSIG (low pressure) system.

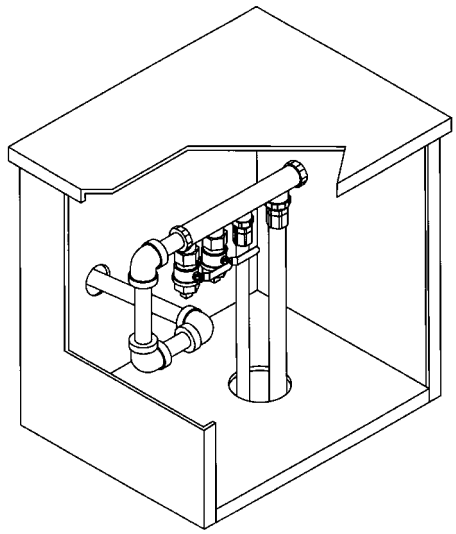

Figure 4.36

SINGLE 4 PORT MANIFOLD
WITH ONE PLUGGED OUTLET

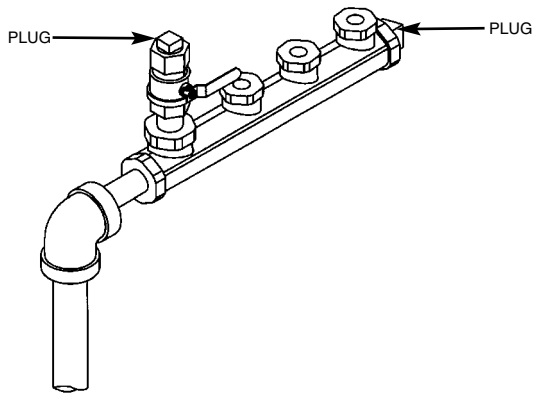

Figure 4.37

- A CSST fitting may be used as a connection to allow servicing and replacement of the line regulator. However, if desired, a pipe union may be installed downstream of the regulator (See Figure 4.43).
- A tee connection on the inlet side of the line regulator may be used to monitor supply pressure to the regulator. This tee may also serve as a dirt pocket if required by the local authority (See Figure 4.43).
- To monitor downstream pressure, or to allow for future service additions, leave one port available (with a plug, or a valve end plug installed) in the multiport manifold (See Figure 4.37).
- If the required number of appliances/outlets is more than the number of manifold ports, connect a tee or an additional manifold to provide for the extra required ports (See Figure 4.38).
- Use the manifold bracket to attach a manifold to a wall surface or frame member (See Figure 4.39).
- Affix the manifold assembly to floor joists, wall studs, etc., with hangers, straps, pipe support, U-clamps, etc. (See Figure 4.40).
- When surface mounting a manifold assembly to a wall, use a plywood backing plate for mounting. Fasten the manifold assembly to the plate and secure it to the studs (See Figure 4.41).

SINGLE 3 - PORT MANIFOLD WITH
ADDED TEE ALLOWING FOUR PORTS

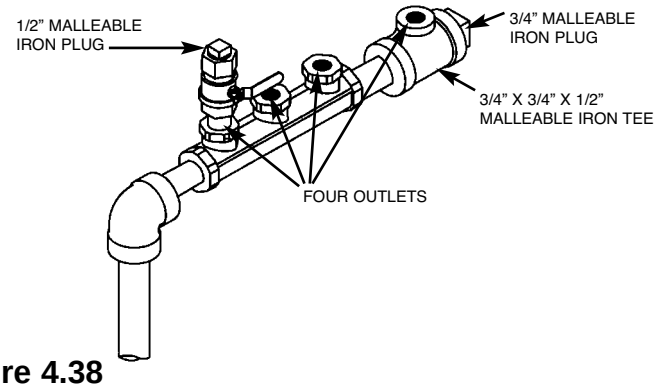

Figure 4.38

SINGLE 3 - PORT MANIFOLD WITH MANIFOLD
BRACKET AND WARDFLEX GAS VALVES INSTALLED

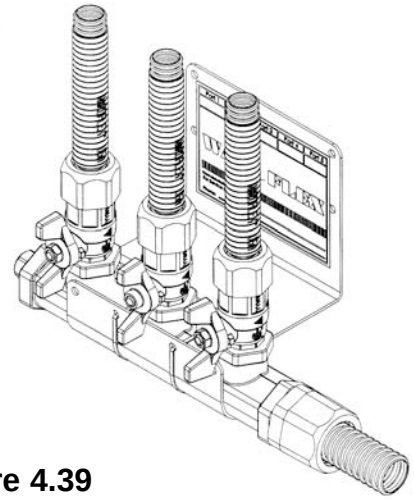

Figure 4.39

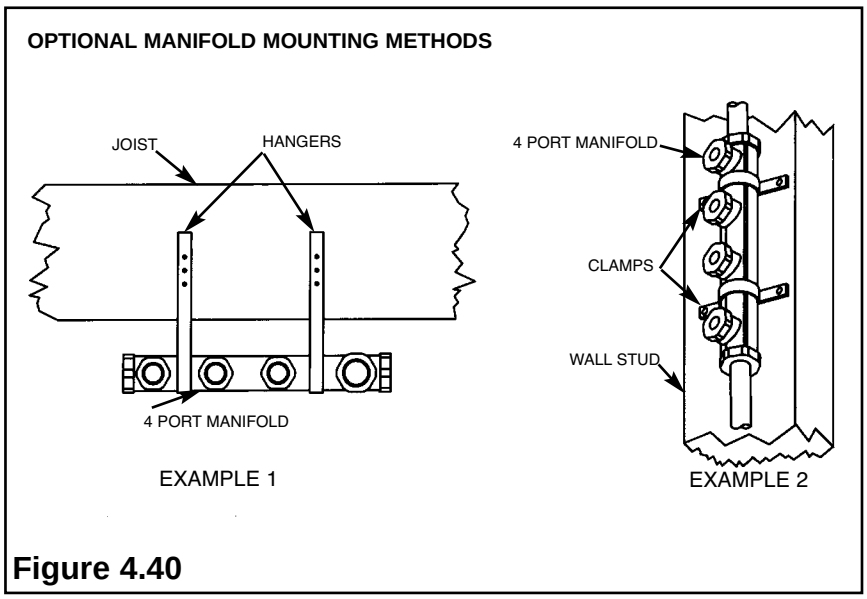

Figure 4.40

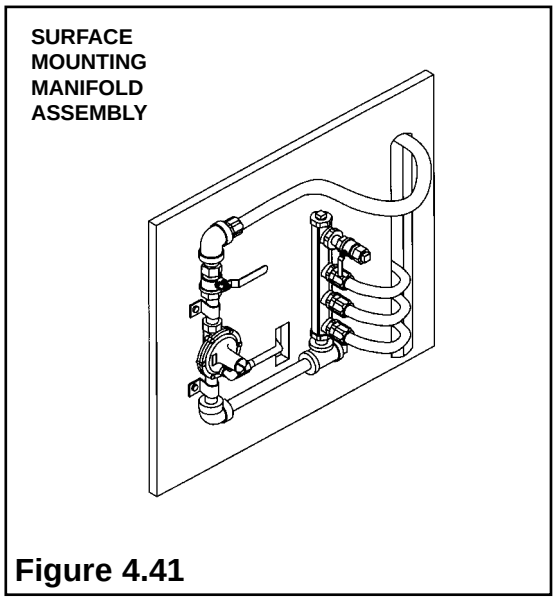

Figure 4.41

WARDFLEX fittings may be extended away from a wall which will be built up later (e.g. brick, stone) by assembling a WARDFLEX Utility Nut with a suitable length of pipe and a floor flange.

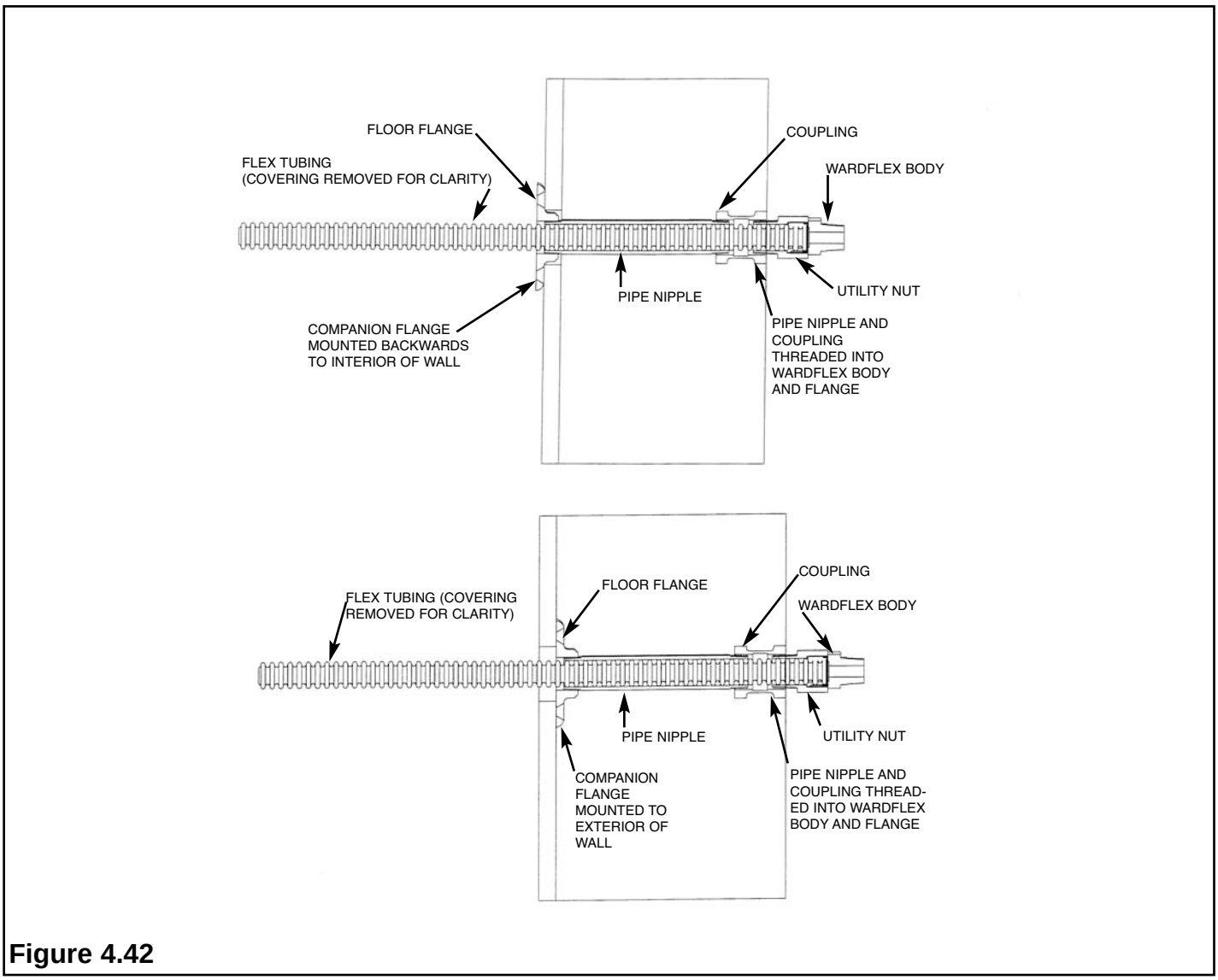

Figure 4.42

4.8 PRESSURE REGULATORS

4.8.1 Installation Requirements

- Vent limiters are available on Maxitrol 325-3L and 325-5AL regulators.
- Do not use leak detector fluids on vent limiters. Corrosion may occur with resulting operational failure.
- Regulators approved for use with vent limiters do not require venting and may be installed indoors in ventilated spaces, consult local code before installation.
- The pressure regulator must be installed in the horizontal (stem up) position when a vent limiter device is used (See Figure 4.43). If installed otherwise, problems with control of downstream pressure may occur. When a vent line is used in place of a vent limiter device, the regulator may be mounted in any position. E.g. Figure 4.41.

TYPICAL REGULATOR/MANIFOLD CONFIGURATION WHEN USING A VENT LIMITER

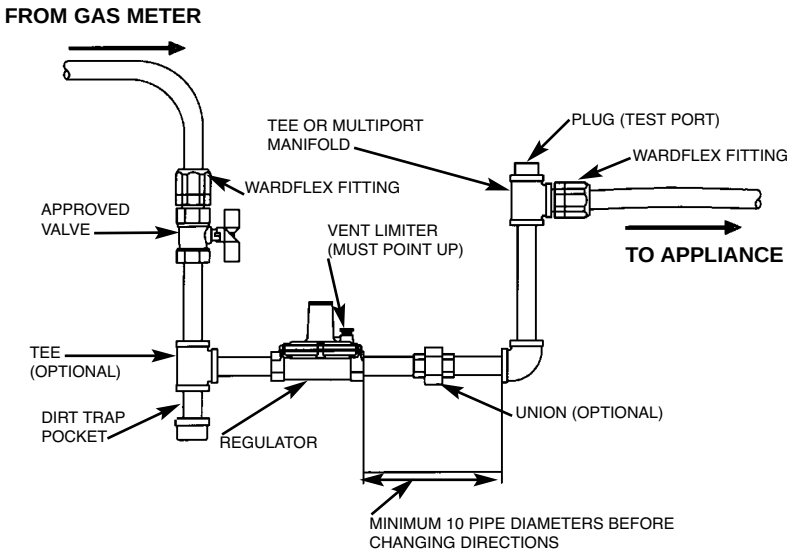

Figure 4.43

- When a vent limiter is desired, a vent limiter device supplied by the manufacturer must be installed. Do not install any type of piping between the limiter and the regulator. The limiter must be installed with the regulator in the upright position, or it may cause operating problems.
- Remove the vent limiter and check the vent opening if a leaking diaphragm is suspected. Remember, regulators will "breathe" when regulating, creating a bubble - A leak will blow bubbles constantly. Do not leak test the vent limiter with liquid leak test solution. This action will contaminate the internal ball check mechanism or plug the breathing hole, resulting in erratic regulator operation.
- On outdoor installations, where applicable, remove the vent limiter and install the regulator upside down to allow drainage of moisture, use appropriate piping in the vent to prevent water from getting into the regulator, or install a Vent Protector offered by Maxitrol..
- Most appliances have their own regulator, reducing line house pressure to approximately 3 to 5 in. WC. You must continue to use this regulator. The use of a pounds-to-inches pressure regulator does not make the appliance regulator unnecessary.
- Use an accessible, CSA Design Certified shut-off valve ahead of the line regulator and also at each appliance (See Figure 4.41). If the line regulator serves only one appliance and the shut-off valve and regulator are near the appliance, it is usually unnecessary to install a second shut-off valve. A shut-off valve is not required ahead of a manifold supplying gas from a 1/2 PSIG (low pressure) system.

- A CSST fitting may be used as a connection to allow servicing and replacement of the line regulator. However, if desired, a pipe union may be installed downstream of the regulator (See Figure 4.43).
- A tee connection on the inlet side of the line regulator may be used to monitor supply pressure to the regulator. This tee may also serve as a dirt pocket if required by the local authority (See Figure 4.43).
- Ward ships 325-3D and 325-5E model regulators complete with a vent limiter. 325-1B models are not available with a vent limiter.
- Regulator flow capacity is determined by the pressure difference between the inlet and outlet pressures, the greater the available pressure drop, the greater the flow. The chart shows capacities for regulators with various inlet pressures and a constant factory-set output of 7" W.C. **Note**: 5 PSI regulators do not deliver greater flow, they safely handle greater inlet pressures.

Regulator Output Capacities in CFH at 7" W.C. (1/4 psi) with Lockup

		Operating Inlet Pressures			
	Regulator	0.5 psi	3/4 psi	1 psi	2 psi
Z21.80	3253	145	200	250	250
2# inlet pr	3255	350	475	550	550
	3257	690	970	1000	1000

Regulator Capacities

Maximum Individual Load: Natural Gas Largest single appliance served by regulator	
325-3L	140,000 Btu/Hr
325-5AL	300,000 Btu/Hr
325-7L	900,000 Btu/Hr
325-3L48 (OPD)	200,000 Btu/Hr
325-5AL600 (OPD)	425,000 Btu/Hr

Capacity: Natural Gas Total load of all appliances combined:	
325-3L	250,000 Btu/Hr
325-5AL	550,000 Btu/Hr
325-7L	1,000,000 Btu/Hr
325-3L48 (OPD)	200,000 Btu/Hr
325-5AL600 (OPD)	425,000 Btu/Hr

- Line regulators, Z21.80 are adjustable from 7-11" W.C. with one spring.
- Regulators can be used with both natural gas and propane. The same spring is used for both gases and pressure adjustments can be made as described in Section 4.8.4.

Gas Pressure Regulating & Control for Elevated Pressure Tubing System Regulator Requirements

A tubing system used at gas pressures exceeding 1/2 PSIG, but intended to serve appliances rated for 1/2 PSIG maximum, shall include a pressure regulator limiting the downstream appliance supply pressure to 1/2 PSIG. The regulator shall incorporate construction which will "lock up" under no-flow conditions to limit the downstream pressure to not more than 1/2 PSIG. The regulator shall comply with the applicable provisions of ANSI Z21.80 or CAN 1-6.3-M82.

Regulators used to reduce elevated system pressure for appliance use must also conform to the following:

- Sized to supply the required appliance load.
- Equipped with an acceptable vent limiting device, supplied by the manufacturer, or be capable of being vented to the outside atmosphere.
- Installed in accordance with manufacturer's printed instructions.
- Installed in an accessible location.
- An CSA Design Certified shut-off valve must be installed upstream of the pressure regulator.

4.8.2 VENT LIMITER OPTIONS

Accessories for Gas Pressure Regulators

Vent Limiting Means	
1,2 3	Automatic vent limiting device-ball check permits free inhalation for fast regulator-diaphragm response on opening cycle, but limits gas escapement should a diaphragm rupture. May be used in multi-poise mounting but to achieve quick regulator response it must be mounted in an upright position. **1**-IAS certified for 14"W.C. Color-brass 1/8" NPT. **2**-IAS certified for 2PSI (LP) and 5 PSI (natural) with 325-3. Color-green 1/8"NPT **3**-IAS certified for 2PSI (LP) and 5 PSI (natural) with 325-5A. Color-brass 3/8"NPT **Satisfies ANSI Standards for both natural and LP gas.**

4.8.3 REGULATOR VENTING REQUIREMENTS

- Pressure regulators for elevated pressure systems that require outside venting (to atmosphere) for proper operation shall be equipped with vent piping extending outside.
- Vent limiting devices may be used on certified pressure regulators.
- Vent limiting devices can only be used when the discharge of gas into the atmosphere is in an open, well ventilated area and is an accepted practice by the local code.
- If the pressure regulator is not located in an open, well-ventilated area, an adequately sized exterior vent must be installed. Venting is required to avoid a gas buildup in the enclosed area if the regulator diaphragm ruptures.
- The vent line shall not be smaller than the vent connected to the pressure regulator.
- The recommended minimum size vent line for the regulator is 1/4 in. normal ID copper tubing or other approved material. The maximum length installed for this size vent line should be less than 30 feet. Larger diameter vent lines can be used if necessary. In determining the proper size vent line for a particular installation, a test may be necessary with the vent line and regulator under normal use to ensure proper regulator operation. Consult with the regulator manufacturer for imitations of length and size of the vent line.
- The vent shall be designed and installed to prevent the entry of water, insects or other foreign materials that could cause blockage.
- Under no circumstances shall a regulator be vented to the appliance flue or building exhaust system.

4.8.4 REGULATOR ADJUSTMENT

- Adjustments can be accomplished by first removing the regulator seal cap to expose the adjusting screw. Turning the screw clockwise will increase outlet pressure, turning it counter-clockwise will decrease pressure.
- If spring adjustment will not produce the desired outlet pressure, check to make sure the main supply pressure is adequate. If the main supply pressure is adequate, consult manufacturer or WARDFLEX for other line-regulator options.
  Do not continue to turn regulator adjusting screw clockwise if the outlet pressure readings do not continue to increase.
  This may result in over-firing due to loss of pressure control, should there be a subsequent increase in inlet pressure.
- The 2 PSI system pounds-to-inches regulator can be adjusted to an outlet pressure ranging between 7 to 11 inches water column pressure for natural gas and 11 inches water column for propane. The regulator must be adjusted according to the manufactures recommended procedure. A pressure gauge mounted just downstream of the regulator can monitor the set pressure under various loads.
- The regulator outlet is pre-set and labeled at the factory for either 7" natural gas or 11" propane.
- The "average" natural gas appliance is designed to operate at 3 to 6 inches water column pressure, and a pressure difference of 1 to 2 inches of water column across the appliance regulator which will prevent slow regulator response. Thus, the appliance regulator will operate best at 4 to 7 inches W.C. inlet pressure. The pounds to-inches system regulators for natural gas are set to deliver 8 inches of W.C. outlet pressure under load to allow for 1-2 inches of W.C. pressure drop in the tubing.
- The average propane gas appliance is designed to operate at 10 to 10 1/2 inches water column pressure. Thus, the pounds to inches regulators for propane gas are set to deliver 11 inches water column outlet pressure under load to allow for 0.5 inches water column pressure drop in the tubing.

4.8.5 OVER PRESSURIZATION PROTECTION

Gas systems using pressures above 2 PSI up to 5 PSI must use OPD (Over Pressure Protection Devices). These allow pressures up to 5 PSI to be used.

4.8.6 PROPANE REGULATORS

- Regulators can be used with propane.
- Typically secondary propane regulators deliver 1/2 PSI outlet pressure so no line regulators are needed.

4.9 UNDERGROUND INSTALLATIONS

TYPICAL INDOOR INSTALLATION OF CSST WITH NON-METALLIC CONDUIT BURIED UNDER CONCRETE SLAB

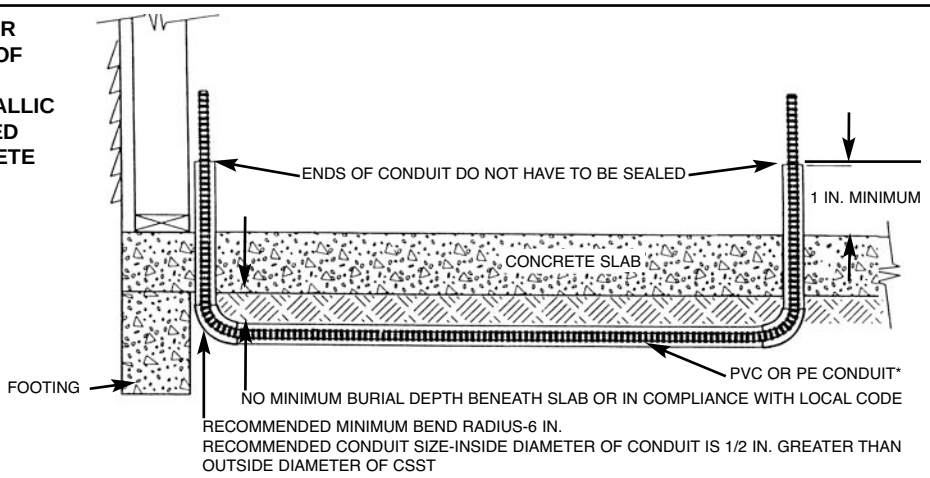

TYPICAL INDOOR INSTALLATION OF CSST WITH NON-METALLIC CONDUIT EMBEDDED IN CONCRETE SLAB

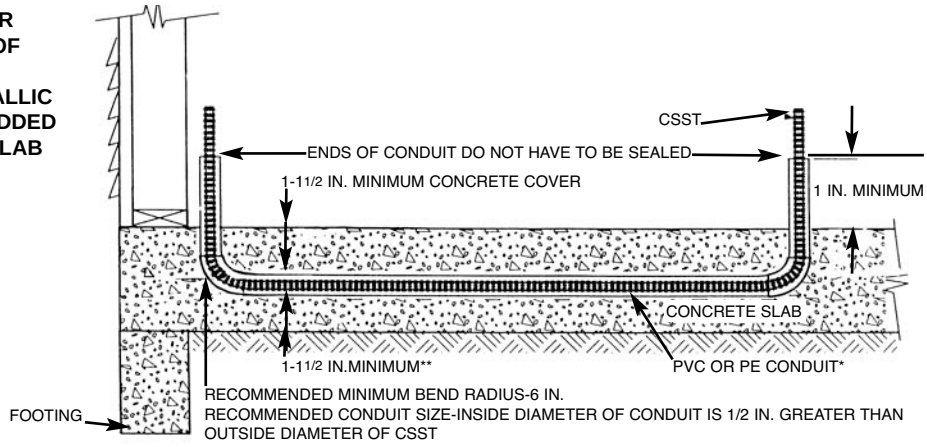

** CONDUIT MUST BE SUR-ROUNDED WITH A MINIMUM OF1-11/2 IN. OF CONCRETE
* PVC CONDUIT-SCHEDULE 40, ASTM D1785 OR EQUIVALENT
PE CONDUIT-SCHEDULE 40, ASTM D2104 OR EQUIVALENT
FITTINGS USED TO CONNECT CONDUIT MUST BE SEALED WATERTIGHT

INDOOR INSTALLATION OF CSST WITH NON-METALLIC CONDUIT EMBEDDED IN OR UNDER CONCRETE SLAB WITH VENTING

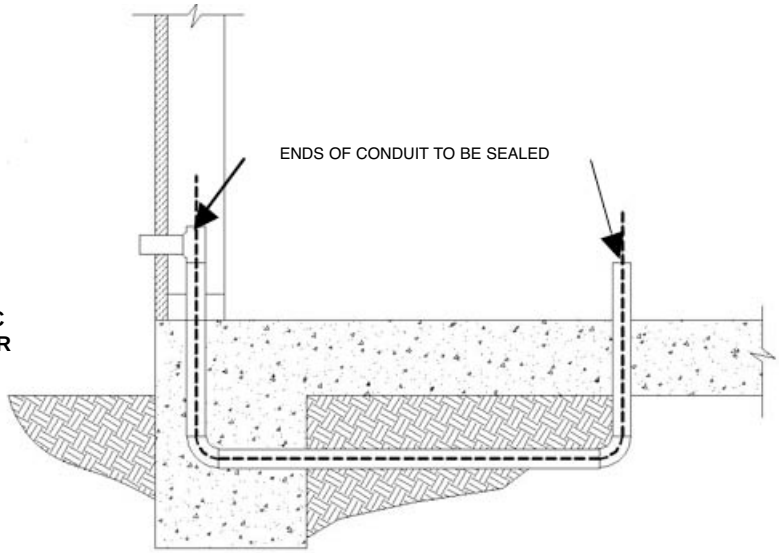

Figure 4.44

4.9 UNDERGROUND INSTALLATIONS

WARDFLEX® may not be directly buried or directly embedded in or under concrete slabs. WARDFLEX® may be installed underground or in/under a concrete slab when routed through previously embedded, non-metallic, watertight conduit such as PVC pipe. Conduit used to protect WARDFLEX® CSST, when installed underground, must have an I.D. ½" larger than the O.D of the CSST. For outdoor underground installations, the annular space between the CSST and the conduit must be sealed to prevent entrance of moisture, dirt, debris, and insects. The use of a mechanical joint, coupling, or tee is prohibited inside the conduit.

For indoor buried installations, Ward Manufacturing does not require the conduit to be vented to the outside. Due to its continuous construction and availability in long run lengths, no fittings are required/permitted inside the conduit. This eliminates the possibility of gas build up caused by leaking fittings after the system has been placed in service. In the event that local code requires the conduit to be vented, the use of a tee designed for use with non-metallic conduit may be placed at the termination end of the conduit. One end of the tee should be sealed while the other outlet can be used to connect a vent line that is routed outside (figure 4.44). Vent lines routed to the outside of a structure must be installed in such a manner to prevent entrance of moisture, dirt, debris, and insects.

Burial Depths:

- Outdoors – minimum of 12"
- In slab – 1-1/2" minimum concrete coverage.
- Under slab – no minimum burial depth below slab or in compliance with local codes.

Conduit Termination Height:

- Indoors – Conduit to extend a minimum of 1" above finished floor height.
- Outdoors – Conduit to extend a minimum of 4" above finished grade.

4.10 WARDFLEX® CSST Electrical Bonding

Direct bonding is required for all natural and LP gas piping systems incorporating WARDFLEX® CSST whether or not the piping system is connected to an electrically powered gas appliance. Direct bonding is included as part of the manufacture's requirements for both single family and multi-family buildings. A person knowledgeable about electrical system design, local electrical code, and these requirements should specify the bonding for commercial applications.

WARDFLEX® CSST installed inside or attached to the exterior of a building or structure shall be electrically continuous and directly bonded, by a qualified person, to the ground system of the building.

The gas piping is considered to be directly bonded when installed in accordance with the following instructions:

- A bonding jumper is permanently and directly connected to the electrical service grounding system.
  This can be achieved through a connection to the electrical service equipment enclosure, the grounded conductor at the electrical service, the grounding electrode conductor (where of sufficient size) or to the one or more grounding electrodes used.
- A single bond connection is made to the building gas piping downstream of the utility meter or second stage regulator (LP systems), but near the gas service entrance (either outdoors or indoors) of the structure, or dow stream of the gas meter of each individual housing unit within a multi-family structure. A "daisy chain" configuration of the bonding conductor is permitted for multi-meter installations. A bonding connection shall not be made to the underground, natural gas utility service line or the underground supply line from a LP storage tank.
- The bonding conductor is not smaller than a #6 AWG copper wire or equivalent. The bonding conductor is installed and protected in accordance with the NEC.
- The bonding conductor is attached in an approved manner in accordance with NEC and the point of attachment for the bonding conductor is accessible.
- Bonding/grounding clamp used is listed to UL 467 or other acceptable national standards.
- The bonding clamp is attached at one point within the piping system to a segment of rigid pipe or a pipe component such as a nipple, fitting or manifold provided it is manufactured with an appropriate and Code listed material.
  The bonding clamp must be attached such that metal to metal contact is achieved with the steel pipe component.
  Remove any paint or applied coating on the pipe surface beneath the clamp. See Figures 1 and 2 for guidance.
  The corrugated stainless steel tubing portion of the gas piping system shall not be used as the point of attachment of the bonding clamp at any location along its length.

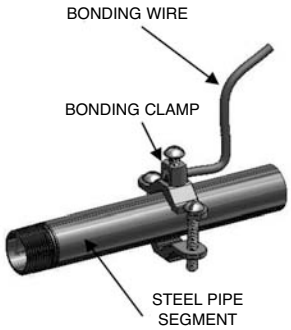

FIGURE 1:
BONDING CLAMP ON STEEL PIPE SEGMENT

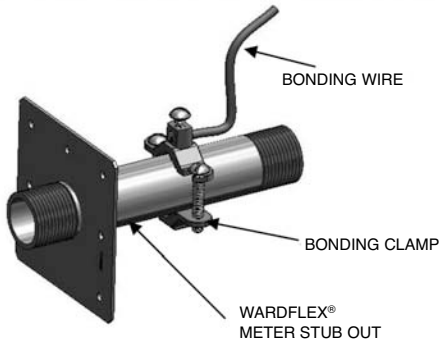

FIGURE 2:
BONDING CLAMP ON WARDFLEX® METER STUB OUT

Proper grounding and bonding may reduce the risk of damage and fire from a lightning strike. Lightning is a highly destructive force. Even a nearby lightning strike that does not strike a structure directly can cause metallic systems in the structure to become energized. If these types of systems are not properly bonded, the difference in potential between the systems may cause the charge to arc from one system to another system. Arcing can cause damage to CSST. Bonding and grounding as set forth above should reduce the risk of arcing and related damage.

Depending upon conditions specific to the location of the structure in which the WARDFLEX® system is being installed, including but not limited to whether or not the area is prone to lightning, the owner of the structure should consider whether or not a lightning protection system is necessary or appropriate. Lightning protection systems are beyond the scope of this bulletin, but are covered by NFPA 780, which is the Standard for the Installation of Lightning Protection Systems, and other standards.

4.11 MANUFACTURED HOUSING GUIDELINES
A. CODE AND ADMINISTRATIVE REQUIREMENTS

1. Manufactured homes and mobile homes bearing an insignia or required to bear an insignia must comply with Title VI 24 Code of Federal Regulations, The National Manufactured Housing Act of 1974 Part 3280. In most jurisdictions this requirement remains in force when the structural, electrical plumbing or mechanical systems are altered. The Code of Federal Regulations, Housing and Urban Development, Part 3280 Manufactured Home Construction and Safety Standards is applicable throughout the USA for manufactured housing construction (also known as “HUD code” housing).

2. There are other types of factory-built housing that do not fall directly under the classification “HUD code” which must also be reviewed for special installation considerations when designing a CSST gas piping system or appliance retrofit. Some examples of this type of housing are Assembly Buildings, Panelized, Modular, and Production Build. WARDFLEX® should not be considered for RVs, which are subject to over the road use and not just initial placement or repositioning.

3. Part 3280 Manufactured Home Construction and Safety Standards 1994 has not been revised or updated for several years. There has been an effort by both NFPA and CABO (now a part of the ICC) to have the US Congress adopt a new Manufactured Housing Code. The latest version of the CABO Code ICC/ANSI 2.0 Manufactured Housing Construction Safety Standards is available but has not been adopted by Congress.

4. Ward Manufacturing LLC, has obtained a written opinion from the U.S. Department of Housing and Urban Development regarding the use of WARDFLEX CSST. This HUD decision states “CSST, such as WARDFLEX, is allowed to be used in HUD manufactured homes (based upon incorporation of NFPA 54-1992 ANSI 223.1 the National Fuel Gas Code into Section 3280.703 Minimum Standards).” This opinion shall be confirmed with State authorities responsible for inspections of HUD Code buildings prior to installing WARDFLEX after the home has left the factory. For factory installations, approval by the DAPIA (Manufacturer’s Design Approval Primary Inspection Agency) is normally required for the piping system design. Contact Ward Manufacturing for specification data and a copy of the HUD decision letter.

B. PIPING SYSTEM DESIGN REQUIREMENTS

1. The primary information for any WARDFLEX® installation is contained in the latest edition of the WARDFLEX® Design Guide and Installation Guide. This guide provides manufacturer's instructions that are a requirement of the ANSI/CSA LC-1 Standard governing certification and test requirements for Corrugated Stainless Steel Tubing. Manufacturer's instructions must be followed.

2. Sizing for gas piping systems in HUD Code homes must be performed in accordance with Part 3280 (Natural Gas piping system acceptable for LP-gas). System sizing is to be done with Low Pressure Capacity Charts utilizing 0.5-inch water column drop. (Refer to the WARDFLEX D&I Guide for proper sizing charts.)

3. The natural gas supply connections shall not be less than the size of the gas piping but shall not be smaller than 3/4-inch nominal pipe size. Gas supply connection shall not be beneath an exit door. Gas supply connection shall be rigidly anchored to a structural member within 6 inches of supply connection. All exterior openings around piping shall be sealed to resist the entrance of rodents.

4. Where fuel gas piping is to be installed in more than one section of an expandable or multiple-unit home, crossover connections between sections of the home shall be constructed by one of the following methods:

A. Listed quick disconnect device, designed to provide a positive seal of the supply side of the gas piping system when such device is separated.

B. Flexible connectors listed for exterior use and a shutoff valve of the non-displaceable rotor type conforming to ANSI Z21.15, installed on supply side.

C. Direct plumbing (CSST) sized in accordance with section B.2 (above).

5. The flexible connector, direct plumbing pipe, or "quick-disconnect" device shall be provided with protection from mechanical and impact damage and located to minimize the possibility of tampering. For gas line crossover connections made with CSST or flexible connectors, the crossover points shall be capped on the supply side to provide a positive seal and covered on the other side with a suitable protective covering.

6. All points of crossover shall be accessible from the exterior of the home.

C. INSTALLATION REQUIREMENTS

1. The preferred location for CSST flexible gas piping is beneath the floor and inside or above the I-beam flange. This location will provide the best protection from transit damage. Appliance stub-outs are easily made utilizing termination mounts or flange mounts rigidly attached to the floor. Final connections can be made with approved flexible appliance connectors dow stream from the appliance shut-off valve. All floor penetrations shall be sealed to resist the entrance of rodents. All CSST should be within the envelope or rigidly attached to the I-beam flange.

2. Where CSST must cross an I-beam flange, the piping shall be securely attached to the house flange to protect the CSST. Angle iron, C-channel or a wooden block are recommended means of attachment. It is preferred to drill through a wooden structural member if possible to avoid crossing the flange.

3. In open joist construction, routing should be within the open web portion of the fabricated joist wherever possible. This location provides necessary support points at each joist location.

4. In all locations, CSST must be supported in accordance with the manufacturers instructions (refer to WARDFLEX D & I Guide Table 4-4). Support should be metallic pipe straps/hangers with rubber, vinyl, or other type of non metallic cushion material to prevent any sharp edges of the hanger from damaging the CSST. For more information on approved hangers, supports and anchors refer to section 7.2.6.1 of the 2009 National Fuel Gas Code.

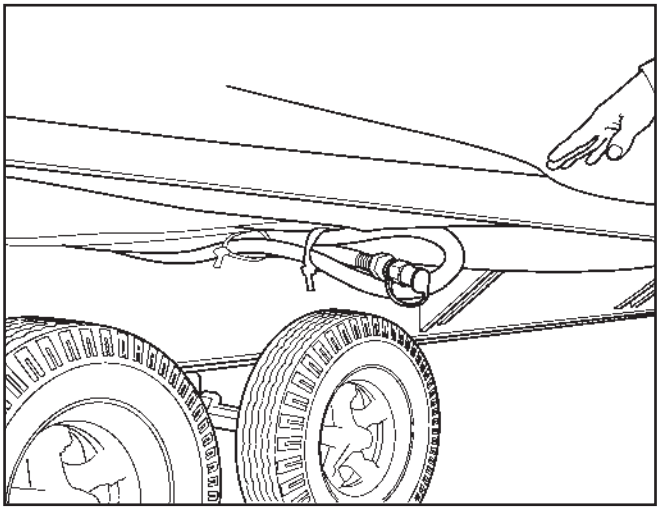

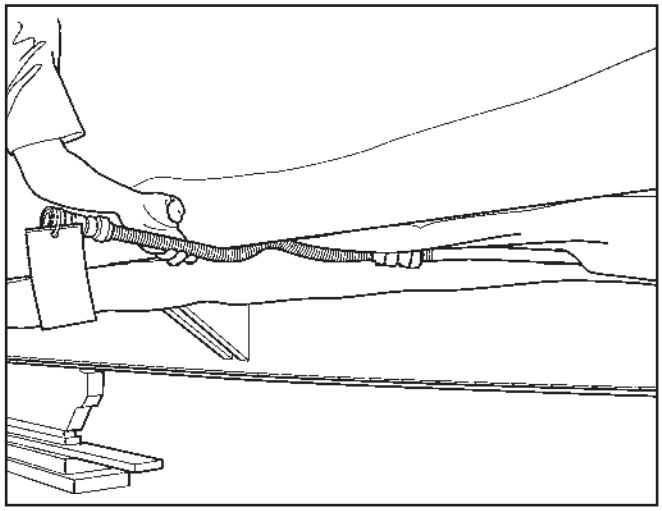

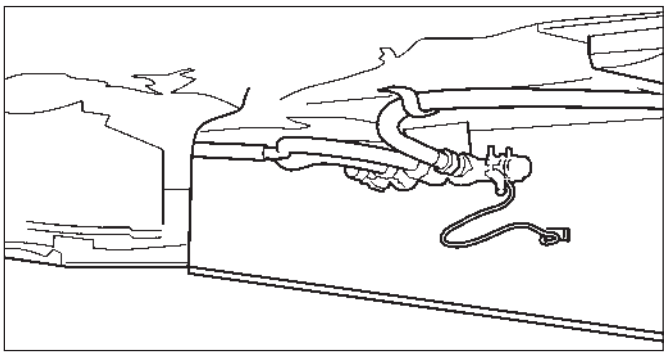

5. "f a (ia f dis s e d it sh l+e r g h' (to d to th ".+h flg *h s &&li s to &a h le s'st h la to s. s &s s u e in 4)7 6 h s is li(it d to - is w r b (µ n (2 i(µ . Li s &s s u r g a o s a e to s s a ' fo th s &s s u e d sh d n to +e s d

6. *h g &&ing sh l+e+d in d e to Wa d Mfa a o i g s+d g rlu r h a s s st a d in st i o .-0 f th WR# L6C 7A" u d a r e isi . "n d t o t h &a l e+d g &ots listd in st i o .-0 h +d g wire (h also+e+d t h h e f h p e &v id it is d t h h r ib h g d g s'st , +' th s e f a sb d s s t &ego d g th ih with a sh w a h +b d t h h sis.

7. 6 d ti g M C* sh l to +e n is id wh ls, &h t s o f . Wh ti g &a s s g wh ls, flo s, &a titis , f , o si(il is th lh s , so h ti g sh l+e &d +' th s e f wh s is h g (s h sh l sg ' fit+o h h tu+ig d h b e g wh b h e ti g &a s s . 75 5* e v e h 'l w &b' h l l e in h &a r h is .

8. A l C* tu+ig lo n s sh l h e h 2 &s d st is f sh h s s st &&ig wr&&d with sili s s e f.+d g t&e *h d fo &b o f h (d p e is s id a d l h o &e s&&o t &e ie a+v s is rlu r d d h fo .

9. 6 it of & &li M

a. *h g su&&' o h o sh l+e r g h' d to a str u u h (e +e within / is f s&&l' h in

b. C* sh l+e s&&d d &ot d &e (f h a u e J s is tru is . !e it s d ; av e >

c. s s a te t g s &&ig &e "e 7 - +e w +e o e &e h ig &&li s

D. INSPECTION AND TEST REQUIREMENTS

1. s s a te t in d with h : 290.; 00 9 >te tig for l e g 9 i>+e o e &&li s a e h d d 9 ii>a te &&li s e d

5.1 MINIMUM INSPECTION REQUIREMENTS

If the tubing is damaged refer to the following subsections to determine the severity of damage and, if necessary the method of repair.

Classification of Repairs

- No repairs or replacement of the tubing is necessary if the tubing is only slightly dented by crushing as indicated in Figure 5.1.

REPAIR UNNECESSARY - NO SIGNIFICANT DAMAGE TO THE TUBING DUE TO IMPACT OR CRUSHING

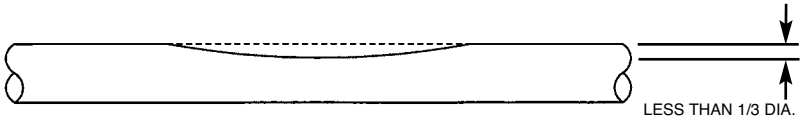

Figure 5.1

- The tubing must be repaired or replaced under the following circumstances:
- The tubing has been significantly damaged (Figure 5.2).
- The tubing has been punctured.
- The tubing has been bent beyond its minimum bend radius so that a crease or kink appears (Figure 5.3).

REPAIR NECESSARY - SIGNIFICANT DAMAGE TO THE TUBING DUE TO IMPACT OR CRUSHING

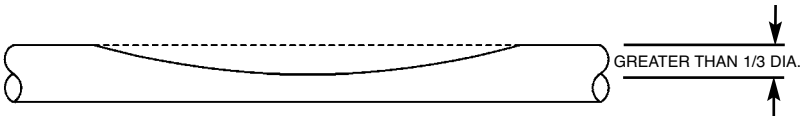

Figure 5.2

5.2 REPAIR/REPLACEMENT OF DAMAGED TUBING

Several methods of repair are discussed below depending on the nature of damage.

REPAIR NECESSARY

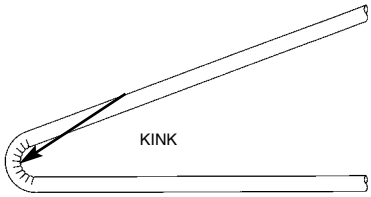

Figure 5.3

WARDFLEX® AND OTHER DESIGNS ARE NOT INTERCHANGEABLE. DO NOT MIX COMPONENTS

In the case of the Outdoor Termination Fitting, install new O-Rings. The installer shall determine the most reliable and economical method of repair using one of the following methods:

- ***Replace the entire tubing run.*** In most cases, when the tubing run is short and easily accessible, it can be replaced faster and more economically than repairing the damaged section. This is the preferred method because extra fittings are not required.
- ***Repair the damaged section***. The damaged tubing can be repaired by each of following two methods.

Method 1: Remove the section of tubing which is damaged and reconnect the new ends with a single mechanical coupling. Use this repair method if the damaged section is small and if there is enough slack tubing in the run to make-up for the removed damaged length.

Method 2: Remove the section of tubing which is damaged and repair/replace as illustrated in figure 5.4.

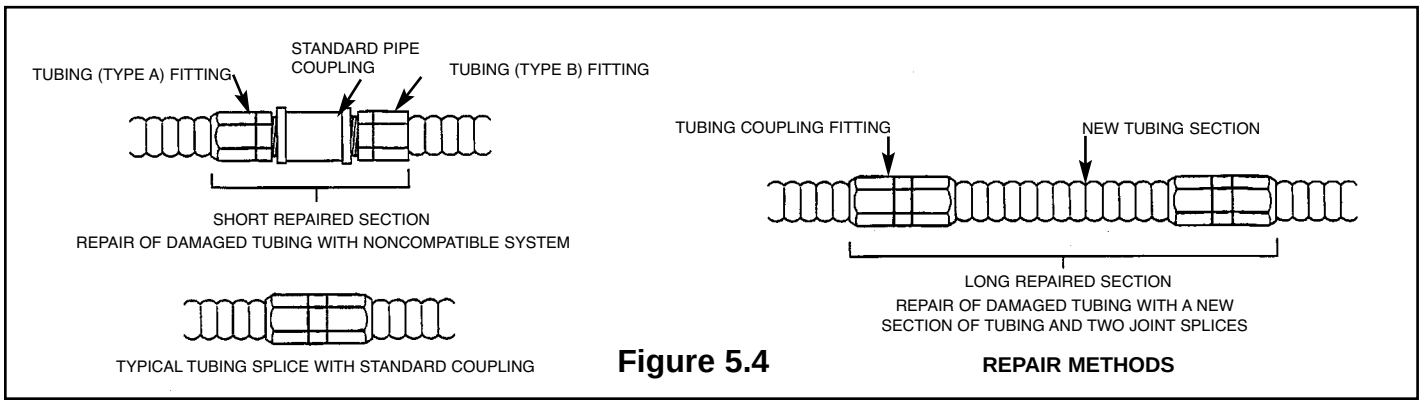

Figure 5.4 **REPAIR METHODS**

6.0 TESTING

6.1 PRESSURE TESTING AND INSPECTION PROCEDURE

- The final installation is to be inspected and tested for leaks at 1 1/2 times the maximum working pressure, but not less than 3 PSIG, using procedures specified in Chapter 7 "Inspection, Testing and Purging" of the National Fuel Gas Code, NFPA 54/ANSI Z223.1 - 2002 (See Annex D). In Canada, refer to the applicable sections of the CAN/CGA - B149 Installation codes.
- Maximum test pressures recommended -10A-50A-40 PSI MAX. Excess pressure will permanently distort tubing.
- Do not connect appliances until after pressure test is completed.
- Inspect the installed system to ensure:
- Presence of listed striker plates and other protective devices at all required locations.
- Acceptable physical condition of the tubing.
- Presence of fittings (with nut bottomed out to the body).
- Correct regulator and manifold arrangement with proper venting requirements.
- All gas outlets for appliance connections should be capped during pressure testing.
- Pressure testing should be performed during rough construction of the facility (before interior walls are finished). This will permit a more complete inspection of the piping system during the pressure testing.
- The elevated pressure system requires a two-part pressure test. (See Figure 6.1)
- The first part is performed on the elevated pressure section, between the meter connection and the pressure regulator.
- The second part is performed on the low pressure section, between the pressure regulator and the individual gas appliance outlets.

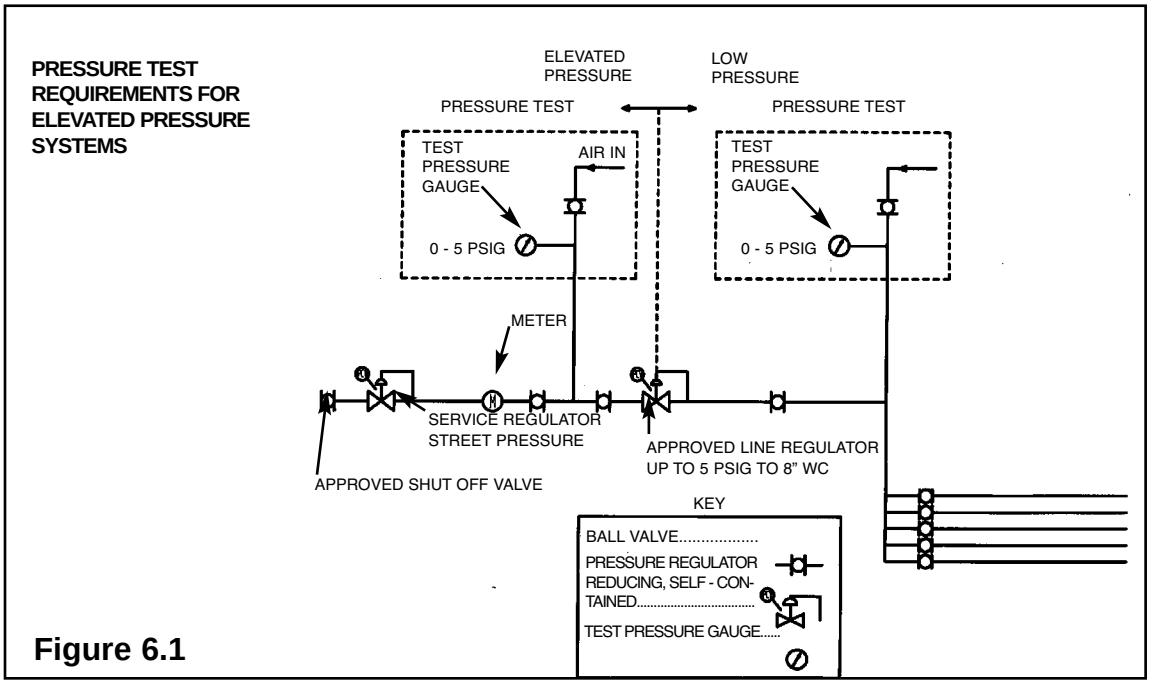

Figure 6.1

Appliance Connection and Leakage Check Procedure

- After the pressure test, inspection and final construction is complete (finished interior walls) connect the appliances to the tubing system.
- Turn the gas on at the meter and inspect for leaks before operating the appliance. Regulator adjustment may be necessary on 2 PSIG systems (refer to manufacturer's instruction) to obtain proper appliance line pressure.
- Connections made at each appliance must be checked for leaks with a non-corrosive commercial leak-testing fluid due to lack of sensitivity in solutions using soap buds or household detergents as stated in ASTM E515-05 section 9.3. Any leak detection solution coming in contact with the WARDFLEX System should have a sulfur and halogen content of less than 10 ppm of each (ASTM E515-05 section 7.4).
- Before placing appliances in operation, the piping system should be purged. This displaces the air in the system with fuel gas. Purge into a well ventilated area.

7.0 SIZING TABLES (NATURAL AND LP)

Table **Page**

A-1 Maximum Capacity of WARDFLEX® Corrugated Stainless Steel Tubing in CFH for Gas Pressure of 0.5 PSI or less and Pressure Drop of 3.0 in.WC (Appliance Lines for Elevated Pressure Systems) 63

A-2 Maximum Capacity of WARDFLEX® Corrugated Stainless Steel Tubing in CFH for Gas Pressure of 0.5 PSI or less and Pressure Drop of 0.5 in. WC (Standard Low Pressure System) 64

A-3 Maximum Capacity of WARDFLEX® Corrugated Stainless Steel Tubing in CFH for Gas Pressure of 0.5 PSI or less and Pressure Drop of 6.0 in WC 64

A-4 Maximum Capacity of WARDFLEX® Corrugated Stainless Steel Tubing in CFH for Gas Pressure of 2 PSIG and Pressure Drop of 1.0 PSIG with a 325 Regulator 65

A-5 Maximum Capacity of WARDFLEX® Corrugated Stainless Steel Tubing in CFH for Gas Pressure of 2 PSIG and Pressure Drop of 1.5 PSIG with a 325 Regulator 65

A-6 Maximum Capacity of WARDFLEX® Corrugated Stainless Steel Tubing in CFH for Gas Pressure of 5 PSIG and Pressure Drop of 3.5 PSIG with a 325 Regulator 66

A-7 Maximum Capacity of WARDFLEX® Corrugated Stainless Steel Tubing in CFH for Gas Pressure of 0.5 PSIG or less and Pressure Drop of 1 in. WC 66

A-14 Maximum Capacity of WARDFLEX® Corrugated Stainless Steel Tubing in CFH for Gas Pressure of 0.5 PSIG or less and Pressure Drop of 2 in WC 67

A-15 Maximum Capacity of WARDFLEX® Corrugated Stainless Steel Tubing in CFH for Gas Pressure of 0.5 PSIG or less and Pressure Drop of 2 in WC 67

A-8 Maximum Capacity of WARDFLEX® Corrugated Stainless Steel Tubing in KBTU for Gas Pressure of 0.5 PSI or less and Pressure Drop of 0.5 in. WC (1.52 S.G.) 68

A-9 Maximum Capacity of WARDFLEX® Corrugated Stainless Steel Tubing in KBTU for Gas Pressure of 2 PSIG and Pressure Drop of 1 psi. (1.52 S.G.) 68

A-10 Maximum Capacity of WARDFLEX® Corrugated Stainless Steel Tubing in KBTU for Gas Pressure of 5 PSIG and Pressure Drop of 3.5 P.S.I. (1.52 S.G.) 69

A-11 Maximum Capacity of WARDFLEX® Corrugated Stainless Steel Tubing in KBTU for Gas Pressure of 0.5 PSI or less and Pressure Drop of 3.0 in. WC (Appliance Lines for Elevated Pressure Systems).(1.52 S.G.) 69

A-12 Maximum Capacity of WARDFLEX® Corrugated Stainless Steel Tubing in KBTU for Gas Pressure of 0.5 PSI or less and Pressure Drop of 6.0 in. WC (Appliance Lines for Elevated Pressure Systems) (1.52 S.G.) 70

A-13 Maximum Capacity of Pipe in Cubic Feet of Gas per hour for Gas Pressure of 0.5 PSI or less and Pressure Drop of 0.5 inches WC 70

Important Note:

When choosing a pressure drop to size the WARDFLEX® system the minimum operating pressure of the unit must be considered. Choosing a pressure drop that will reduce the supply pressure below the minimum operating pressure of the unit will cause the unit to perform poorly or not at all.

Example:
System Supply Pressure: 7 inches W.C.
Unit minimum operating pressure: 5" W.C.

The use of a 3 inch W.C. pressure drop would result in a minimum inlet pressure at the unit of 4 inches W.C. In this case an alternate pressure drop of 2 inches or less should be selected to meet the minimum operating pressure of the unit.

7.1 NATURAL GAS

Table A-1

Maximum Capacity of WARDFLEX Corrugated Stainless Steel Tubing in Cubic Feet of Gas per Hour for:
Gas Pressure: 0.5 PSI or less Pressure Drop: 3.0 inches Water Column (Based on 0.60 specific gravity gas)*

LENGTH OF TUBING RUN	TUBING SIZE & EHD						
	10A (3/8˝) 15	15A (1/2˝) 19	20A (3/4˝) 25	25A (1˝) 30	32A (1-1/4˝) 37	38A (1-1/2˝) 48	50A (2") 62
5 feet	160	327	649	1182	2069	5014	9293
10 feet	112	231	462	828	1481	3563	6703
15 feet	90	189	379	673	1219	2917	5536
20 feet	78	164	329	580	1061	2531	4834
25 feet	69	147	295	518	953	2268	4352
30 feet	63	134	270	471	873	2073	3993
40 feet	54	116	234	407	759	1799	3487
50 feet	48	104	210	363	683	1611	3139
60 feet	44	95	192	330	625	1473	2880
80 feet	38	82	167	285	544	1278	2515
100 feet	34	73	149	254	489	1145	2264
150 feet	27	60	122	206	402	937	1870
200 feet	23	52	106	178	350	813	1633
300 feet	19	42	87	144	288	666	1348
500 feet	14	33	68	111	225	518	1060

***Table includes losses for four 90 degree bends and 2 end fittings. To compute flow capacity for tubing runs with a larger number of bends and/or fittings, add the appropriate number of feet to the actual run length using the following formula:**
L = 1.3 (n) L = Numbers of feet to be added to actual run length. n = Number of bends and/or fittings over six.

NATURAL GAS

Table A-2 Maximum Capacity of WARDFLEX Corrugated Stainless Steel Tubing in Cubic Feet of Gas per Hour for:
Gas Pressure: 0.5 PSI or less Pressure Drop: 0.5 inches Water Column (Based on 0.60 specific gravity gas)*

LENGTH OF TUBING RUN	TUBING SIZE & EHD						
	10A (3/8″) 15	15A (1/2″) 19	20A (3/4″) 25	25A (1″) 30	32A (1 1/4″) 37	38A (1-1/2″) 48	50A (2″) 62
5 feet	63	134	270	471	873	2073	3993
10 feet	44	95	192	330	625	1473	2880
15 feet	36	77	157	268	514	1206	2379
20 feet	31	67	137	231	447	1046	2077
25 feet	27	60	122	206	402	937	1870
30 feet	25	55	112	188	368	857	1716
40 feet	21	47	97	162	320	743	1498
50 feet	19	42	87	144	288	666	1348
60 feet	17	39	80	131	263	609	1237
80 feet	15	33	69	113	230	528	1080
100 feet	13	30	62	101	206	473	972
150 feet	10	24	51	82	170	387	803
200 feet	9	21	44	71	147	336	701
300 feet	7	17	36	57	121	275	579
500 feet	5	13	28	44	94	214	455

*Table includes losses for four 90 degree bends and 2 end fittings. To compute flow capacity for tubing runs with a larger number of bends and/or fittings, add the appropriate number of feet to the actual run length using the following formula:
L = 1.3 (n) L = Numbers of feet to be added to actual run length. n = Number of bends and/or fittings over six.

NATURAL GAS

Table A-3 Maximum Capacity of WARDFLEX Corrugated Stainless Steel Tubing in Cubic Feet of Gas per Hour for:
Gas Pressure: 0.5 PSI or less Pressure Drop: 6.0 inches Water Column (Based on 0.60 specific gravity gas)*

LENGTH OF TUBING RUN	TUBING SIZE & EHD						
	10A (3/8″) 15	15A (1/2″) 19	20A (3/4″) 25	25A (1″) 30	32A (1 1/4″) 37	38A (1-1/2″) 48	50A (2″) 62
5 feet	229	461	911	1687	2889	7057	12884
10 feet	160	327	649	1182	2069	5014	9293
15 feet	130	267	532	960	1702	4106	7676
20 feet	112	231	462	828	1481	3563	6703
25 feet	99	207	414	739	1331	3192	6033
30 feet	90	189	379	673	1219	2917	5536
40 feet	78	164	329	580	1061	2531	4834
50 feet	69	147	295	518	953	2268	4352
60 feet	63	134	270	471	873	2073	3993
80 feet	54	116	234	407	759	1799	3487
100 feet	48	104	210	363	683	1611	3139
150 feet	39	85	172	294	561	1319	2592
200 feet	34	73	149	254	489	1145	2264
300 feet	27	60	122	206	402	937	1870
500 feet	21	46	95	159	315	729	1470

*Table includes losses for four 90 degree bends and 2 end fittings. To compute flow capacity for tubing runs with a larger number of bends and/or fittings, add the appropriate number of feet to the actual run length using the following formula:
L = 1.3 (n) L = Numbers of feet to be added to actual run length. n = Number of bends and/or fittings over six.

NATURAL GAS

Table A-4 Maximum Capacity of WARDFLEX Corrugated Stainless Steel Tubing in Cubic Feet of Gas per Hour for:
Gas Pressure: 2 P.S.I. Pressure Drop: 1 P.S.I (Based on 0.60 specific gravity gas)*

LENGTH OF TUBING RUN	TUBING SIZE & EHD						
	10A (3/8″) 15	15A (1/2″) 19	20A (3/4″) 25	25A (1″) 30	32A (1-1/4″) 37	38A (1-1/2″) 48	50A (2″) 62
5 feet	505	988	1926	3698	6038	15008	26511
10 feet	353	700	1372	2592	4325	10664	19122
15 feet	286	572	1125	2105	3557	8732	15795
20 feet	247	496	977	1816	3097	7578	13795
25 feet	220	444	876	1620	2782	6788	12415
30 feet	200	405	801	1475	2547	6205	11392
40 feet	172	351	696	1273	2218	5384	9948
50 feet	154	314	624	1135	1992	4823	8954
60 feet	140	287	571	1034	1825	4409	8217
80 feet	120	249	496	892	1589	3826	7175
100 feet	107	222	445	795	1427	3427	6459
150 feet	87	182	364	646	1173	2806	5335
200 feet	75	157	317	557	1022	2435	4658
300 feet	61	129	260	453	840	1994	3848
500 feet	46	100	202	348	657	1550	3024

*Table includes losses for four 90 degree bends and 2 end fittings. To compute flow capacity for tubing runs with a larger number of bends and/or fittings, add the appropriate number of feet to the actual run length using the following formula:
L = 1.3 (n) L = Numbers of feet to be added to actual run length. n = Number of bends and/or fittings over six.

NATURAL GAS

Table A-5 Maximum Capacity of WARDFLEX Corrugated Stainless Steel Tubing in Cubic Feet of Gas per Hour for:
Gas Pressure: 2 P.S.I. Pressure Drop: 1.5 P.S.I. (Based on 0.60 specific gravity gas)*

LENGTH OF TUBING RUN	TUBING SIZE & EHD						
	10A (3/8″) 15	15A (1/2″) 19	20A (3/4″) 25	25A (1″) 30	32A (1-1/4″) 37	38A (1-1/2″) 48	50A (2″) 62
5 feet	623	1209	2348	4553	7340	18329	32095
10 feet	435	856	1673	3191	5257	13024	23149
15 feet	353	700	1372	2592	4325	10664	19122
20 feet	304	607	1192	2236	3765	9254	16697
25 feet	271	543	1068	1994	3381	8290	15030
30 feet	247	496	977	1816	3097	7578	13792
40 feet	213	430	849	1567	2696	6576	12043
50 feet	189	384	761	1398	2422	5891	10840
60 feet	172	351	696	1273	2218	5384	9948
80 feet	148	304	605	1098	1931	4672	8686
100 feet	132	272	542	979	1734	4186	7819
150 feet	107	222	445	795	1427	3427	6459
200 feet	92	193	386	686	1242	2974	5639
300 feet	75	157	317	557	1022	2435	4658
500 feet	57	122	246	429	799	1893	3661

*Table includes losses for four 90 degree bends and 2 end fittings. To compute flow capacity for tubing runs with a larger number of bends and/or fittings, add the appropriate number of feet to the actual run length using the following formula:
L = 1.3 (n) L = Numbers of feet to be added to actual run length. n = Number of bends and/or fittings over six.

NATURAL GAS

Table A-6 Maximum Capacity of WARDFLEX Corrugated Stainless Steel Tubing in Cubic Feet of Gas per Hour for:
Gas Pressure: 5 P.S.I. Pressure Drop: 3.5 P.S.I (Based on 0.60 specific gravity gas)*

LENGTH OF TUBING RUN	TUBING SIZE & EHD						
	10A (3/8˝) 15	15A (1/2˝) 19	20A (3/4˝) 25	25A (1˝) 30	32A (1-1/4˝) 37	38A (1-1/2˝) 48	50A (2") 62
5 feet	965	1842	3554	7030	11040	27832	47851
10 feet	675	1305	2532	4927	7906	19776	34514
15 feet	547	1067	2076	4002	6504	16193	28509
20 feet	472	925	1804	3453	5662	14052	24894
25 feet	420	827	1617	3080	5085	12588	22408
30 feet	382	756	1479	2805	4658	11506	20563
40 feet	330	655	1285	2420	4055	9985	17955
50 feet	294	586	1152	2158	3642	8945	16163
60 feet	267	535	1054	1966	3336	8176	14831
80 feet	230	464	915	1696	2904	7095	12951
100 feet	205	415	821	1513	2608	6356	11658
150 feet	166	339	673	1229	2146	5204	9629
200 feet	143	294	585	1060	1868	4516	8408
300 feet	116	240	479	861	1537	3698	6945
500 feet	89	186	373	662	1201	2875	5459

*Table includes losses for four 90 degree bends and 2 end fittings. To compute flow capacity for tubing runs with a larger number of bends and/or fittings, add the appropriate number of feet to the actual run length using the following formula:
L = 1.3 (n) L = Numbers of feet to be added to actual run length. n = Number of bends and/or fittings over six.

NATURAL GAS

Table A-7 Maximum Capacity of WARDFLEX Corrugated Stainless Steel Tubing in Cubic Feet of Gas per Hour for:
Gas Pressure: 0.5 P.S.I. or less Pressure Drop: 1 Inches W.C. (Based on 0.60 specific gravity gas)*

LENGTH OF TUBING RUN	TUBING SIZE & EHD						
	10A (3/8˝) 15	15A (1/2˝) 19	20A (3/4˝) 25	25A (1˝) 30	32A (1-1/4˝) 37	38A (1-1/2˝) 48	50A (2") 62
5 feet	90	189	379	673	1219	2917	5536
10 feet	63	134	270	471	873	2073	3993
15 feet	51	109	221	383	718	1697	3298
20 feet	44	95	192	330	625	1473	2880
25 feet	39	85	172	294	561	1319	2592
30 feet	36	77	157	268	514	1206	2379
40 feet	31	67	137	231	447	1046	2077
50 feet	27	60	122	206	402	937	1870
60 feet	25	55	112	188	368	857	1716
80 feet	21	47	97	162	320	743	1498
100 feet	19	42	87	144	288	666	1348
150 feet	15	34	71	117	237	545	1114
200 feet	13	30	62	101	206	473	972
300 feet	10	24	51	82	170	387	803
500 feet	8	19	39	63	132	301	631

*Table includes losses for four 90 degree bends and 2 end fittings. To compute flow capacity for tubing runs with a larger number of bends and/or fittings, add the appropriate number of feet to the actual run length using the following formula:
L = 1.3 (n) L = Numbers of feet to be added to actual run length. n = Number of bends and/or fittings over six.

NATURAL GAS

Table A-14 Maximum Capacity of WARDFLEX Corrugated Stainless Steel Tubing in Cubic Feet of Gas per Hour for:
Gas Pressure: 0.5 P.S.I. or less Pressure Drop: 2 Inches W.C. (Based on 0.60 specific gravity gas)*

LENGTH OF TUBING RUN	TUBING SIZE & EHD						
	10A (3/8˝) 15	15A (1/2˝) 19	20A (3/4˝) 25	25A (1˝) 30	32A (1-1/4˝) 37	38A (1-1/2˝) 48	50A (2") 62
5 feet	130	267	532	960	1702	4106	7676
10 feet	80	189	379	673	1219	2917	5536
15 feet	73	154	311	546	1003	2389	4573
20 feet	63	134	270	471	873	2073	3993
25 feet	56	120	242	420	784	1857	3594
30 feet	51	109	211	383	718	1697	3298
40 feet	44	95	192	330	625	1473	2880
50 feet	39	85	172	294	561	1319	2592
60 feet	36	77	157	268	514	1206	2379
80 feet	31	67	137	231	447	1046	2077
100 feet	27	60	122	206	402	937	1870
150 feet	22	49	100	167	331	767	1544
200 feet	19	42	87	144	288	666	1348
300 feet	15	34	71	117	237	545	1114
500 feet	12	27	55	90	185	424	875

*Table includes losses for four 90 degree bends and 2 end fittings. To compute flow capacity for tubing runs with a larger number of bends and/or fittings, add the appropriate number of feet to the actual run length using the following formula:
L = 1.3 (n) L = Numbers of feet to be added to actual run length. n = Number of bends and/or fittings over six.

NATURAL GAS

Table A-15 Maximum Capacity of WARDFLEX Corrugated Stainless Steel Tubing in Cubic Feet of Gas per Hour for:
Gas Pressure: 0.5 P.S.I. or less Pressure Drop: 1 Inches W.C. (Based on 0.60 specific gravity gas)*

LENGTH OF TUBING RUN	TUBING SIZE & EHD						
	10A (3/8˝) 15	15A (1/2˝) 19	20A (3/4˝) 25	25A (1˝) 30	32A (1-1/4˝) 37	38A (1-1/2˝) 48	50A (2") 62
5 feet	90	189	379	673	1219	2917	5536
10 feet	63	134	270	471	873	2073	3993
15 feet	51	109	221	383	718	1697	3298
20 feet	44	95	192	330	625	1473	2880
25 feet	39	85	172	294	561	1319	2592
30 feet	36	77	157	268	514	1206	2379
40 feet	31	67	137	231	447	1046	2077
50 feet	27	60	122	206	402	937	1870
60 feet	25	55	112	188	368	857	1716
80 feet	21	47	97	162	320	743	1498
100 feet	19	42	87	144	288	666	1348
150 feet	15	34	71	117	237	545	1114
200 feet	13	30	62	101	206	473	972
300 feet	10	24	51	82	170	387	803
500 feet	8	19	39	63	132	301	631

PROPANE

Table A-8

Maximum Capacity of WARDFLEX Corrugated Stainless Steel Tubing in KBTU per Hour for:
Gas Pressure: 0.5 PSI or less Pressure Drop: 0.5 Inches W.C. (Based on 1.52 specific gravity gas)*

LENGTH OF TUBING RUN	TUBING SIZE & EHD						
	10A (3/8″) 15	15A (1/2″) 19	20A (3/4″) 25	25A (1″) 30	32A (1-1/4″) 37	38A (1-1/2″) 48	50A (2″) 62
5 feet	100	212	427	745	1380	3277	6312
10 feet	70	150	304	522	988	2328	4553
15 feet	57	122	248	424	812	1906	3761
20 feet	49	106	217	365	707	1653	3283
25 feet	43	95	193	326	635	1481	2956
30 feet	40	87	177	297	582	1355	2713
40 feet	33	74	153	256	506	1175	2368
50 feet	30	66	138	228	455	1053	2131
60 feet	27	62	126	207	416	963	1955
80 feet	24	52	109	179	363	835	1707
100 feet	21	47	98	160	325	748	1536
150 feet	16	38	81	130	268	612	1269
200 feet	14	33	70	112	233	531	1108
300 feet	11	27	57	90	191	435	915
500 feet	8	21	44	70	149	338	719

***Table includes losses for four 90 degree bends and 2 end fittings. To compute flow capacity for tubing runs with a larger number of bends and/or fittings, add the appropriate number of feet to the actual run length using the following formula:**
L = 1.3 (n) L = Numbers of feet to be added to actual run length. n = Number of bends and/or fittings over six.

PROPANE

Table A-9

Maximum Capacity of WARDFLEX Corrugated Stainless Steel Tubing in KBTU per Hour for:
Gas Pressure: 2 P.S.I. Pressure Drop: 1 P.S.I. (Based on 1.52 specific gravity gas)*

LENGTH OF TUBING RUN	TUBING SIZE & EHD						
	10A (3/8″) 15	15A (1/2″) 19	20A (3/4″) 25	25A (1″) 30	32A (1-1/4″) 37	38A (1-1/2″) 48	50A (2″) 62
5 feet	798	1562	3045	5846	9545	23724	41907
10 feet	558	1107	2169	4097	6837	16857	30227
15 feet	452	904	1778	3327	5623	13803	24968
20 feet	390	784	1544	2871	4896	11979	21802
25 feet	348	702	1385	2561	4397	10730	19625
30 feet	316	640	1266	2332	4027	9809	18008
40 feet	272	555	1100	2012	3507	8511	15725
50 feet	243	496	986	1794	3149	7624	14154
60 feet	221	454	903	1635	2884	6970	12989
80 feet	190	394	784	1410	2511	6048	11342
100 feet	169	351	703	1257	2256	5417	10210
150 feet	138	288	575	1021	1855	4436	8433
200 feet	119	248	501	880	1616	3849	7363
300 feet	96	204	411	716	1328	3152	6083
500 feet	73	158	319	550	1039	2450	4780

***Table includes losses for four 90 degree bends and 2 end fittings. To compute flow capacity for tubing runs with a larger number of bends and/or fittings, add the appropriate number of feet to the actual run length using the following formula:**
L = 1.3 (n) L = Numbers of feet to be added to actual run length. n = Number of bends and/or fittings over six.

PROPANE

Table A-10

Maximum Capacity of WARDFLEX Corrugated Stainless Steel Tubing in KBTU per Hour for:
Gas Pressure: 5 P.S.I. Pressure Drop: 3.5 P.S.I. (Based on 1.52 specific gravity gas)*

LENGTH OF TUBING RUN	TUBING SIZE & EHD						
	10A (3/8″) 15	15A (1/2″) 19	20A (3/4″) 25	25A (1″) 30	32A (1-1/4″) 37	38A (1-1/2″) 48	50A (2″) 62
5 feet	1525	2912	5618	11113	17451	43996	75641
10 feet	1067	2063	4002	7788	12498	31261	54558
15 feet	865	1687	3282	6326	10281	25597	45066
20 feet	746	1462	2852	5458	8951	22213	39351
25 feet	664	1307	2556	4869	8038	19899	35422
30 feet	604	1195	2338	4434	7363	18188	32505
40 feet	522	1035	2031	3825	6410	15784	28382
50 feet	465	926	1821	3411	5757	14140	25550
60 feet	422	846	1666	3108	5273	12924	23444
80 feet	364	733	1446	2681	4591	11215	20472
100 feet	324	656	1298	2392	4123	10047	18428
150 feet	262	536	1064	1943	3392	8226	15221
200 feet	226	465	925	1676	2953	7139	13291
300 feet	183	379	757	1361	2429	5846	10978
500 feet	141	294	590	1046	1899	4545	8629

***Table includes losses for four 90 degree bends and 2 end fittings. To compute flow capacity for tubing runs with a larger number of bends and/or fittings, add the appropriate number of feet to the actual run length using the following formula:**
L = 1.3 (n) L = Numbers of feet to be added to actual run length. n = Number of bends and/or fittings over six.

PROPANE

Table A-11

Maximum Capacity of WARDFLEX Corrugated Stainless Steel Tubing in KBTU per Hour for:
Gas Pressure: 0.5 PSI or less Pressure Drop: 3 Inches W.C. (Based on 1.52 specific gravity gas)*

LENGTH OF TUBING RUN	TUBING SIZE & EHD						
	10A (3/8″) 15	15A (1/2″) 19	20A (3/4″) 25	25A (1″) 30	32A (1-1/4″) 37	38A (1-1/2″) 48	50A (2″) 62
5 feet	253	517	1026	1868	3270	7926	14690
10 feet	177	365	730	1309	2342	5632	10596
15 feet	142	299	599	1064	1927	4611	8751
20 feet	123	259	520	917	1678	4001	7641
25 feet	109	232	466	819	1507	3585	6879
30 feet	100	212	427	745	1380	3277	6312
40 feet	85	183	370	643	1201	2844	5512
50 feet	76	164	332	574	1079	2547	4962
60 feet	70	150	304	522	988	2328	4553
80 feet	60	130	264	451	860	2020	3976
100 feet	54	115	236	402	773	1810	3579
150 feet	43	95	193	326	635	1481	2956
200 feet	36	82	168	281	553	1285	2581
300 feet	30	66	138	228	455	1053	2131
500 feet	22	52	107	175	355	819	1676

***Table includes losses for four 90 degree bends and 2 end fittings. To compute flow capacity for tubing runs with a larger number of bends and/or fittings, add the appropriate number of feet to the actual run length using the following formula:**
L = 1.3 (n) L = Numbers of feet to be added to actual run length. n = Number of bends and/or fittings over six.

PROPANE

Table A-12 Maximum Capacity of WARDFLEX Corrugated Stainless Steel Tubing in KBTU per Hour for:
Gas Pressure: 0.5 PSi or less Pressure Drop: 6 Inches W.C. (Based on 1.52 specific gravity gas)*

LENGTH OF TUBING RUN	TUBING SIZE & EHD						
	10A (3/8˝) 15	15A (1/2˝) 19	20A (3/4˝) 25	25A (1˝) 30	32A (1-1/4˝) 37	38A (1-1/2˝) 48	50A (2") 62
5 feet	362	729	1440	2667	4567	11155	20366
10 feet	253	517	1026	1868	3270	7926	14690
15 feet	205	422	841	1518	2691	6491	12134
20 feet	177	365	730	1309	2342	5632	10596
25 feet	156	327	654	1168	2104	5046	9537
30 feet	142	299	599	1064	1927	4611	8751
40 feet	123	259	520	917	1678	4001	7641
50 feet	109	232	466	819	1507	3585	6879
60 feet	100	212	427	745	1380	3277	6312
80 feet	85	183	370	643	1201	2844	5512
100 feet	76	164	332	574	1079	2547	4962
150 feet	62	134	272	465	887	2085	4097
200 feet	54	115	236	402	773	1810	3579
300 feet	43	95	193	326	635	1481	2956
500 feet	33	73	150	251	497	1152	2324

*Table includes losses for four 90 degree bends and 2 end fittings. To compute flow capacity for tubing runs with a larger number of bends and/or fittings, add the appropriate number of feet to the actual run length using the following formula:
L = 1.3 (n) L = Numbers of feet to be added to actual run length. n = Number of bends and/or fittings over six.

7.2 STEEL PIPE CAPACITIES

Table A-13 Maximum Capacity of WARDFLEX Sch 40 steel pipe in Cubic Feet of Gas per Hour for:
Gas Pressure: 0.5 P.S.I. or less Pressure Drop: 0.5 Inches W.C. (Based on 0.60 specific gravity gas)*

LENGTH OF PIPE	NOMINAL IRON PIPE SIZE AND INTERNAL DIAMETER (inches)										
	1/4"	3/8"	1/2"	3/4"	1"	1-1/4"	1-1/2"	2"	2-1/2"	3"	4"
10 feet	43	95	175	360	680	1,400	2,100	3,950	6,300	11,000	23,000
20 feet	29	65	120	250	465	950	1,460	2,750	4,350	7,700	15,800
30 feet	24	52	97	200	375	770	1,180	2,200	3,520	6,250	12,800
40 feet	20	45	82	170	320	660	990	1,900	3,000	5,300	10,900
50 feet	18	40	73	151	285	580	900	1,680	2,650	4,750	9,700
60 feet	16	36	66	138	260	530	810	1,520	2,400	4,300	8,800
70 feet	15	33	61	125	240	490	750	1,400	2,250	3,900	8,100
80 feet	14	31	57	118	220	460	690	1,300	2,050	3,700	7,500
90 feet	13	29	53	110	205	430	650	1,220	1,950	3,450	7,200
100 feet	12	27	50	103	195	400	620	1,150	1,850	3,250	6,700
125 feet	11	24	44	93	175	360	550	1,020	1,650	2,950	6,000
150 feet	10	22	40	84	160	325	500	950	1,500	2,650	5,500
175 feet	9	20	37	77	145	300	460	850	1,370	2,450	5,000
200 feet	8	19	35	72	135	280	430	800	1,280	2,280	4,600

8.1 DEFINITION OF TERMINOLOGY IN THIS GUIDE

AGA - American Gas Association

ANSI - American National Standards Institute

ANSI/AGA LC 1b- CGA 6.26b - M01 - Fuel Gas Piping Systems Using Corrugated Stainless Steel Tubing (CSST)

ANSI Z223.1 - 2002 edition of the National Fuel Gas Code published by American National Standards Institute. Also known as NFPA 54 (National Fire Protection Association - pamphlet 54).

ASTM - American Society for Testing and Materials

Appliance - Any device which utilizes gas as a fuel or raw material to produce light, heat, power, refrigeration or air conditioning.

ASME - American Society of Mechanical Engineers

Authority Having Jurisdiction - The organization, office or individual responsible for approving equipment, installations, or procedures.

BTU - Abbreviation for British Thermal Unit, which is the quantity of heat required to raise the temperature of one pound of water one degree Fahrenheit.

CFH - Gas flow rate stated in cubic feet per hour. A CFH of natural gas typically contains 1000 BTU's and LPG typically contains 2500 BTU's.

CGA - Canadian Gas Association

CAN/CGA - B149.1 - Natural Gas Installation code - most current edition

CAN/CGA - B149.2 - Propane Installation code - most current edition

CSA - Canadian Standards Association

CSST - Corrugated stainless steel tubing.

Delivery Pressure - Gas pressure available after the gas meter.

Design Pressure - The maximum permitted operating pressure.

Drip Leg - The container (dirt trap pocket) placed at the lowest point in a system of piping to collect foreign materials and condensate. The container must be accessible for cleanout.

EHD - Equivalent Hydraulic Diameter. A measure of the relative hydraulic efficiency between different tubing sizes. The larger the value of EHD, the greater the flow capacity.

Elevated Pressure System - Term for any pressure above 1/2 PSIG, but less than 5 PSIG.

Full Lockup Regulator - Specifically designed regulator capable of stopping gas flow if the load goes to zero, thus, preventing the downstream from increasing more than 2"(in.) WC pressure above the set point.

Joint - A connection between two lengths of tubing or a length of tubing and fitting.

Joint Compound - Non-hardening material used on pipe threads to ensure a seal.

Load - The amount of gas required by an appliance, or group of appliances, per their manufacturers rating. (See definition of CFH)

Manifold - A fitting to which a number of branch lines are connected.

Meter - An instrument installed to measure the volume of gas delivered through a piping system.

NFPA - National Fire Protection Agency

Piping - As used in this guide, either pipe or tubing or both.

A. Pipe - Rigid conduit of iron, steel, copper, brass or aluminum.
B. Tubing - Semirigid conduit of corrugated stainless steel (CSST).

Pressure - Unless otherwise stated, is expressed in pounds per square inch above atmospheric pressure, i.e., gauge pressure (PSIG).

Pressure Drop - The loss in gas pressure due to friction or obstruction in tubing, valves, fittings, regulators and burners.

Pressure Regulator - A valve which reduces and maintains pressure. It automatically opens and closes in response to changing pressure conditions in the downstream piping.

PSIG - Pounds per square inch, gauge. The pressure as read from a measurement gauge or device. Gauge pressure is pressure above atmospheric pressure and is sometimes simply referred to as PSI.

Purge - To completely displace an existing gas with a new gas.

Regulator, Gas Appliance Pressure - A device for controlling and maintaining a uniform pressure to the manifold of gas burning equipment.

Regulator, Line Gas Pressure - A device installed between the service pressure regulator and the gas appliance regulator for controlling, maintaining or reducing the pressure in that portion of the piping system downstream of the device. This device is used in elevated pressure systems and is simply referred to as a pressure regulator in this guide.

Regulator, Service Pressure - A device installed by the serving gas supplier to reduce and limit the service line gas pressure to delivery pressure.

Regulator Vent - The opening in the atmospheric side of the regulator housing, permitting the in and out movement of air to compensate for the movement of the regulator diaphragm.

Specific Gravity - Applied to a gas it is the ratio of the weight of a given volume to that of the same volume of air, both measured under the same conditions.

Tubing - ASTM A240 Type 304 annular corrugated stainless steel tubing, which is bendable and comes in 50, 100, 180, 250, 500 and 1,000 foot coils depending on the diameter.

Valve - A device used to shut-off gas flow to the system.

Vent Limiting Device - A valve that limits the discharge of gas from a regulator in the event of a diaphragm rupture. Gas discharge is limited to an ANSI approved level.

Water Column, Inches (in. WC) - A method of stating pressure measured in inches of water column by a manometer or pressure gauge. Commonly used in the gas industry when the pressure is less than 1 PSIG. Approximate conversion between PSIG and in. WC:

1 PSIG	=	28 in. WC
1/2 PSIG	=	14 in. WC
1/4 PSIG	=	7 in. WC

- Specific Gravity Factor
- Pressure Drop Curves for Corrugated Tubing Fittings
- Equivalent Lengths Factor for Fittings and Valves

Specific Gravity Correction Factor

Gas piping systems that are to be supplied with gas of a specific gravity other than 0.60 shall apply a specific gravity factor.

Such application is accomplished by multiplying the capacities given in Tables A-1 through A-7 and Table A-15 by the appropriate multiplier from Table A-14. In case the exact specific gravity does not appear in the table, choose the next higher value specific gravity shown.

Tables A-1 through A-13 are located on Pages 61-67.

Table A-14 Multipliers to be Used with Tables A-1 through A-7 and Table A-15

SPECIFIC GRAVITY	MULTIPLIER	SPECIFIC GRAVITY	MULTIPLIER
0.35	1.31	1.00	0.78
0.40	1.23	1.10	0.74
0.45	1.16	1.20	0.71
0.50	1.10	1.30	0.68
0.55	1.04	1.40	0.66
0.60	1.00	1.50	0.63
0.65	0.96	1.60	0.61
0.70	0.93	1.70	0.59
0.75	0.90	1.80	0.58
0.80	0.87	1.90	0.56
0.85	0.84	2.00	0.55
0.90	0.82	2.10	0.54

Table A-15 Natural Gas Flow in CFH

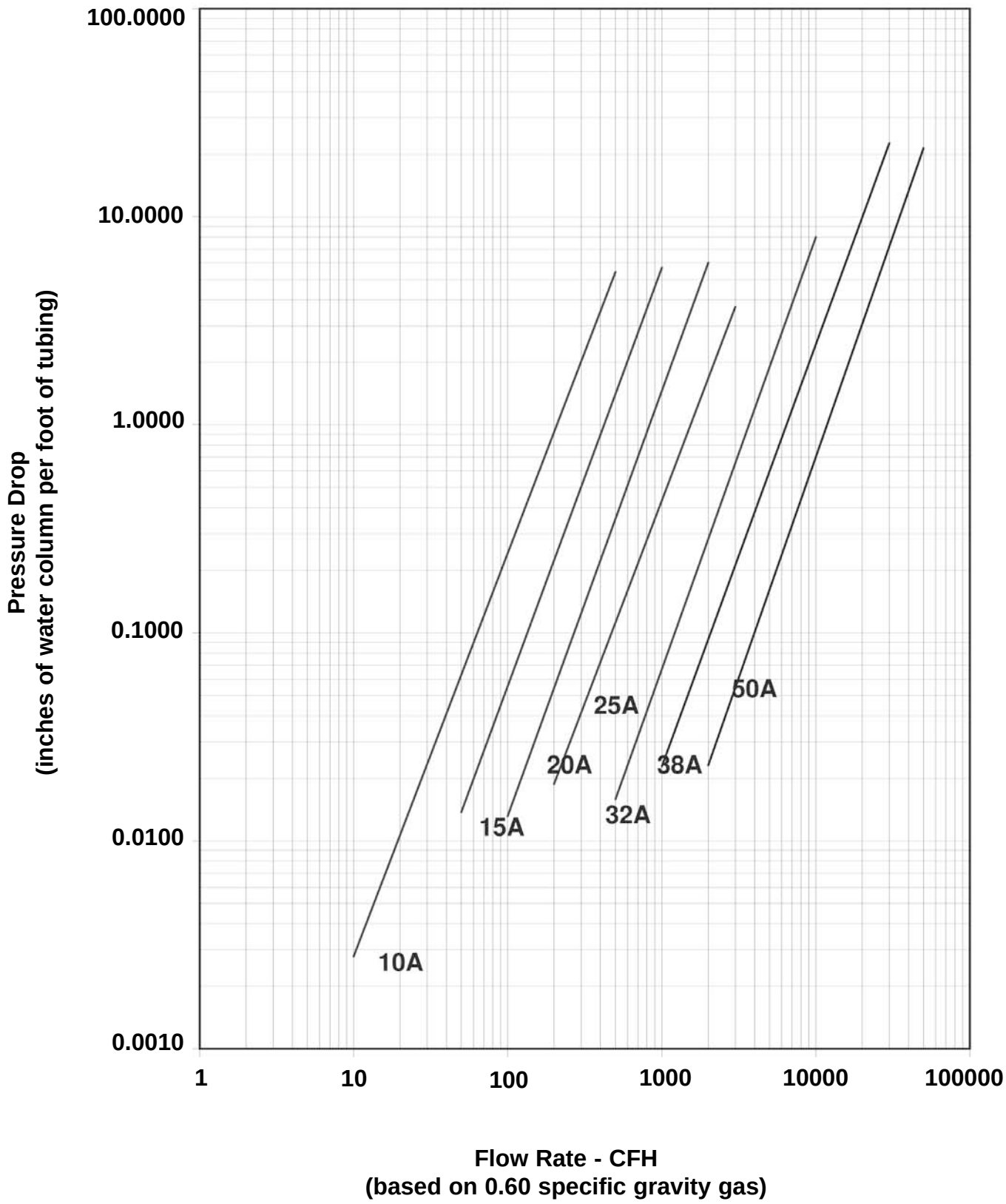

Table A-16 Propane Flow in CFH

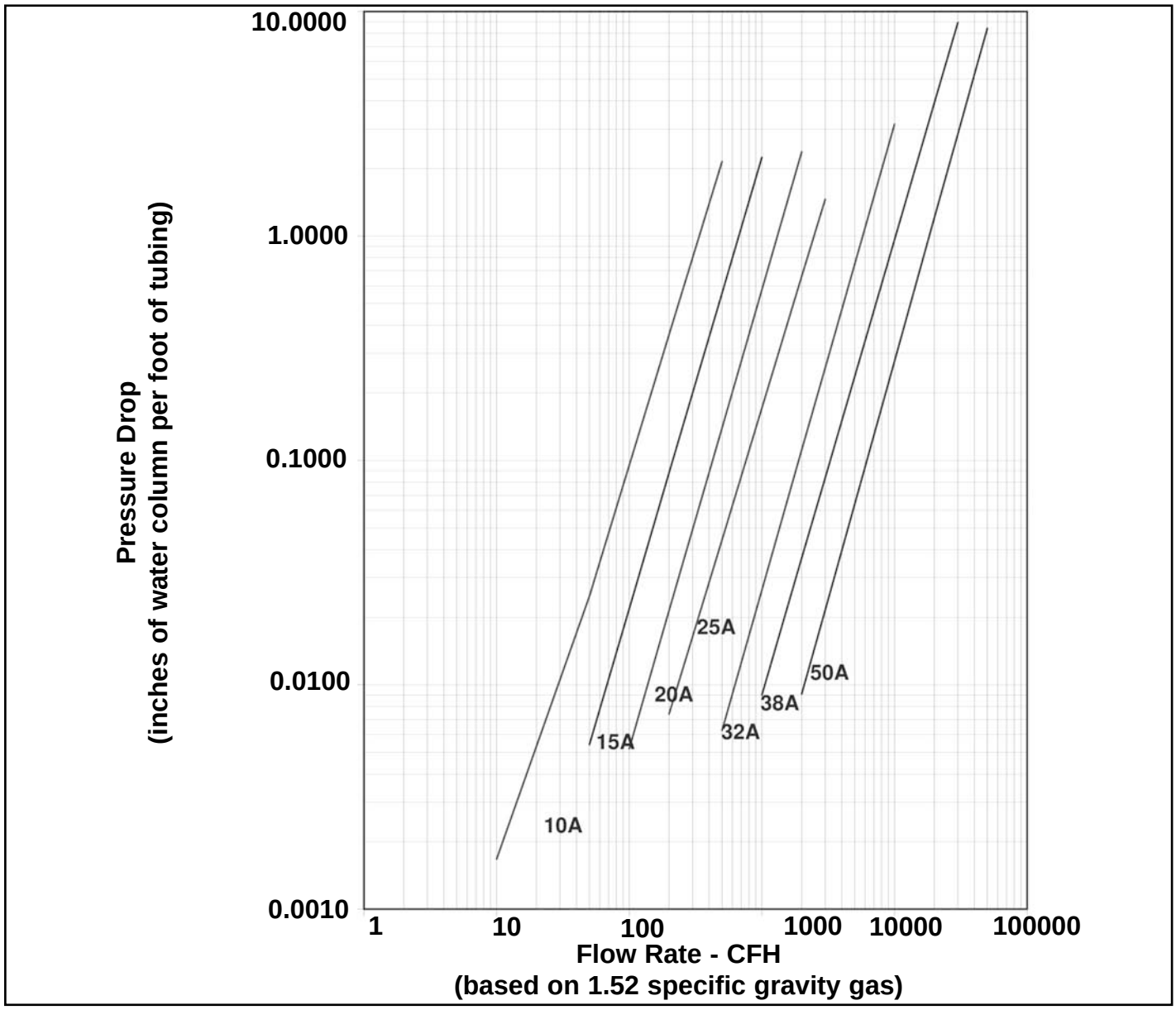

Equivalent Lengths Factor for Fittings and Valves

For additional pipe sizing information concerning equivalent lengths in feet of corrugated stainless steel tubing for fittings and valves refer to the "National Fuel Gas Code" ANSI Z223.1 NFPA 54 2002 Table C.2.2. In Canada, refer to the applicable sections of the CAN/CGA B149 Installation Codes. Apply the following coefficients to the equivalent length in feet of 1/2 in. nominal schedule 40 straight pipe to convert to corrugated tubing.

Table A-17 Equivalent Lengths Factor for Fittings and Valves
10A Tubing L2[1] = L1[2] (0.08)n[3]
15A Tubing L2 = L1 (0.4)n
25A, 32A , 38A, 50A Tubing L2 = L1 (6.0)n
[1] L1 = Length in feet of 1/2 in. schedule 40 (standard weight) straight pipe (Table C.2.2).
[2] L2 = Equivalent length in feet of 10A/15, 15A/19, 20A/25, 25A/30, 32A/37, 38A/48 or 50A/62 tubing for fittings and valves.
[3] n = Number of fittings or valves.

Table A-18 Pressure Drop/Ft. Sizing

	WARDFLEX							SCHEDULE 40 PIPE									
								Pressure Drop in Inches W.C. per Foot									
Q=Natural Gas Flow in CFH	10A 3/8″	15A 1/2″	20A 3/4″	25A 1″	32A 1-1/4″	38A 1-1/2″	50A 2″	1/2″	3/4″	1″	1-1/4″	1-1/2″	2″	2-1/2″	3″	3-1/2″	4″
20	0.0100	0.0022	0.0005	0.0002	0.0000	0.0000	0.0000	0.0009	0.0002	0.0001	0.0000	0.0000	0.0000	0.0000	0.0000	0.0000	0.0000
30	0.0233	0.0049	0.0011	0.0005	0.0001	0.0000	0.0000	0.0020	0.0005	0.0002	0.0000	0.0000	0.0000	0.0000	0.0000	0.0000	0.0000
40	0.0407	0.0087	0.0020	0.0008	0.0001	0.0000	0.0000	0.0034	0.0009	0.0003	0.0001	0.0000	0.0000	0.0000	0.0000	0.0000	0.0000
50	0.0628	0.0137	0.0032	0.0013	0.0002	0.0001	0.0000	0.0051	0.0013	0.0004	0.0001	0.0001	0.0000	0.0000	0.0000	0.0000	0.0000
60	0.0893	0.0198	0.0046	0.0018	0.0003	0.0001	0.0000	0.0071	0.0018	0.0006	0.0001	0.0001	0.0000	0.0000	0.0000	0.0000	0.0000
70	0.1204	0.0270	0.0063	0.0024	0.0004	0.0001	0.0000	0.0095	0.0024	0.0008	0.0002	0.0001	0.0000	0.0000	0.0000	0.0000	0.000
80	0.1560	0.0353	0.0083	0.0031	0.0005	0.0001	0.0000	0.0121	0.0031	0.0010	0.0003	0.0001	0.0000	0.0000	0.0000	0.0000	0.0000
90	0.1959	0.0447	0.0106	0.0040	0.0007	0.0002	0.0000	0.0151	0.0039	0.0012	0.0003	0.0001	0.0000	0.0000	0.0000	0.0000	0.0000
100	0.2403	0.0553	0.0131	0.0049	0.0009	0.0002	0.0000	0.0183	0.0047	0.0015	0.0004	0.0002	0.0001	0.0000	0.0000	0.0000	0.0000
110	0.2890	0.0670	0.0159	0.0058	0.0011	0.0003	0.0000	0.0219	0.0056	0.0017	0.0005	0.0002	0.0001	0.0000	0.0000	0.0000	0.0000
120	0.342	0.0798	0.0190	0.0069	0.0013	0.0003	0.0001	0.0257	0.0066	0.0020	0.0005	0.0003	0.0001	0.0000	0.0000	0.0000	0.0000
130	0.3994	0.0937	0.0224	0.0081	0.0015	0.0004	0.0001	0.0298	0.0076	0.0024	0.0006	0.0003	0.0001	0.0000	0.0000	0.0000	0.0000
140	0.4610	0.1088	0.0261	0.0094	0.0018	0.0004	0.0001	0.0341	0.0087	0.0027	0.0007	0.0003	0.0001	0.0000	0.0000	0.0000	0.0000
150	0.5269	0.1249	0.0300	0.0107	0.0020	0.0005	0.0001	0.0388	0.0099	0.0031	0.0008	0.0004	0.0001	0.0000	0.0000	0.0000	0.0000
160	0.5970	0.1423	0.0342	0.0121	0.0023	0.0006	0.0001	0.0437	0.0112	0.0035	0.0009	0.0004	0.0001	0.0001	0.0000	0.0000	0.0000
170	0.6714	0.1607	0.0388	0.0137	0.0026	0.0006	0.0001	0.0489	0.0125	0.0039	0.0010	0.0005	0.0001	0.0001	0.0000	0.0000	0.0000
180	0.7500	0.1803	0.0436	0.0153	0.0030	0.0007	0.0001	0.0543	0.0139	0.0043	0.0011	0.0005	0.0002	0.0001	0.0000	0.0000	0.0000
190	0.8328	0.2010	0.0487	0.0170	0.0033	0.0008	0.0002	0.0600	0.0154	0.0048	0.0013	0.0006	0.0002	0.0001	0.0000	0.0000	0.0000
200	0.9198	0.2229	0.0540	0.0188	0.0037	0.0009	0.0002	0.0660	0.0169	0.0052	0.0014	0.0007	0.0002	0.0001	0.0000	0.0000	0.0000
225	1.1554	0.2824	0.0688	0.0236	0.0047	0.0011	0.0002	0.0821	0.0210	0.0065	0.0017	0.0008	0.0002	0.0001	0.0000	0.0000	0.0000
250	1.4170	0.3491	0.0853	0.0290	0.0059	0.0014	0.0003	0.0997	0.0255	0.0079	0.0021	0.0010	0.0003	0.0001	0.0000	0.0000	0.0000
275	1.7042	0.4229	0.1036	0.0349	0.0071	0.0017	0.0003	0.1189	0.0304	0.0094	0.0025	0.0012	0.0004	0.0001	0.0001	0.0000	0.0000
300	2.0170	0.5038	0.1238	0.0414	0.0086	0.0020	0.0004	0.1397	0.0357	0.0111	0.0029	0.0014	0.0004	0.0002	0.0001	0.0000	0.0000
325	2.3551	0.5918	0.1458	0.0483	0.0101	0.0023	0.0005	0.1619	0.0414	0.0128	0.0034	0.0016	0.0005	0.0002	0.0001	0.0000	0.0000
350	2.7186	0.6870	0.1697	0.0559	0.0118	0.0027	0.0006	0.1857	0.0475	0.0147	0.0039	0.0018	0.0005	0.0002	0.0001	0.0000	0.0000
375	3.1072	0.7892	0.1954	0.0639	0.0136	0.0031	0.0007	0.2110	0.0540	0.0167	0.0044	0.0021	0.0006	0.0003	0.0001	0.0000	0.000
400	3.5209	0.8986	0.2230	0.0725	0.0156	0.0036	0.0008	0.2377	0.0608	0.0189	0.0050	0.0024	0.0007	0.0003	0.0001	0.0001	0.0000
425	3.9595	1.0154	0.2524	0.0816	0.0176	0.0040	0.0009	0.2659	0.0680	0.0211	0.0056	0.0026	0.0008	0.0003	0.0001	0.0001	0.0000
450	4.4230	1.1389	0.2837	0.0912	0.0199	0.0045	0.0010	0.2955	0.0756	0.0234	0.0062	0.0029	0.0009	0.0004	0.0001	0.0001	0.0000
475	4.9112	1.2698	0.3169	0.1013	0.0222	0.0050	0.0011	0.3265	0.0835	0.0259	0.0069	0.0032	0.0010	0.0004	0.0001	0.0001	0.0000
500	5.4241	1.4078	0.3519	0.1120	0.0247	0.0056	0.0012	0.3590	0.0918	0.0285	0.0075	0.0036	0.0011	0.0004	0.0002	0.0001	0.0000
525	5.9616	1.5529	0.3888	0.1232	0.0274	0.0062	0.0014	0.3929	0.1005	0.0312	0.0082	0.0039	0.0012	0.0005	0.0002	0.0001	0.0000
550	6.5236	1.7053	0.4276	0.1349	0.0301	0.0068	0.0015	0.4282	0.1095	0.0340	0.0090	0.0043	0.0013	0.0005	0.0002	0.0001	0.0001
575	7.1101	1.8648	0.4683	0.1471	0.0330	0.0074	0.0016	0.4649	0.1189	0.0369	0.0098	0.0046	0.0014	0.0006	0.0002	0.0001	0.0001
600	7.7209	2.0315	0.5109	0.1598	0.0361	0.0081	0.0018	0.5029	0.1286	0.0399	0.0106	0.0050	0.0015	0.0006	0.0002	0.0001	0.0001
625	8.3561	2.2053	.5553	0.1731	0.0393	0.0088	0.0020	0.5423	0.1387	0.0430	0.0114	0.0054	0.0016	0.0007	0.0002	0.0001	0.0001
650	9.0155	2.3864	0.6017	0.1868	0.0426	0.0095	0.0021	0.5831	0.1491	0.0463	0.0122	0.0058	0.0017	0.0007	0.0003	0.0001	0.0001
675	9.6991	2.5746	0.6500	0.2011	0.0461	0.0103	0.0023	0.6252	0.1599	0.0496	0.0131	0.0062	0.0019	0.0008	0.0003	0.0001	0.0001
700	10.4068	2.7700	0.7002	0.2159	0.0497	0.0111	0.0025	0.6687	0.1710	0.0531	0.0140	0.0066	0.0020	0.0008	0.0003	0.0001	0.0001
725	11.1386	2.9726	0.7522	0.2311	0.0535	0.0119	0.0027	0.7135	0.1825	0.0566	0.0150	0.0071	0.0021	0.0009	0.0003	0.0002	0.0001
750	11.8944	3.1824	0.8062	0.2469	0.0574	0.0127	0.0029	0.7597	0.1943	0.0603	0.0159	0.0076	0.0022	0.0009	0.0003	0.0002	0.0001
775	12.6742	3.3994	0.8621	0.2632	0.0614	0.0136	0.0031	0.8071	0.2064	0.0640	0.0169	0.0080	0.0024	0.0010	0.0004	0.0002	0.0001
800	13.4779	3.6236	0.9200	0.2801	0.0656	0.0145	0.0033	0.8559	0.2189	0.0679	0.0180	0.0085	0.0025	0.0011	0.0004	0.0002	0.0001
825	14.3055	3.8550	0.9797	0.2974	0.0699	0.0154	0.0035	0.9060	0.2317	0.0719	0.0190	0.0090	0.0027	0.0011	0.0004	0.0002	0.0001
850	15.1569	4.0936	1.0414	0.3152	0.0744	0.0164	0.0038	0.9574	0.2449	0.0760	0.0201	0.0095	0.0028	0.0012	0.0004	0.0002	0.0001
875	16.0321	4.3394	1.1050	0.3335	0.0790	0.0174	0.0040	1.0101	0.2583	0.0801	0.0212	0.0100	0.0030	0.0013	0.0004	0.0002	0.0001
900	16.9311	4.5924	1.1705	0.3524	0.0838	0.0184	0.0042	1.0641	0.2721	0.0844	0.0223	0.0106	0.0031	0.0013	0.0005	0.0002	0.0001
925	17.8537	4.8526	1.2379	0.3717	0.0887	0.0195	0.0045	1.1194	0.2863	0.0888	0.0235	0.0111	0.0033	0.0014	0.0005	0.0002	0.0001
950	18.8000	5.1200	1.3073	0.3916	0.0937	0.0205	0.0048	1.1759	0.3008	0.0933	0.0247	0.0117	0.0035	0.0015	0.0005	0.0003	0.0001
975	19.7699	5.3946	1.3786	0.4119	0.0989	0.0216	0.0050	1.2338	0.3155	0.0979	0.0259	0.0123	0.0037	0.0015	0.0005	0.0003	0.0001

	WARDFLEX							SCHEDULE 40 PIPE									
								Pressure Drop in Inches W.C. per Foot									
Q=Natural Gas Flow in CFH	10A 3/8″	15A 1/2″	20A 3/4″	25A 1″	32A 1-1/4″	38A 1-1/2″	50A 2″	1/2″	3/4″	1″	1-1/4″	1-1/2″	2″	2-1/2″	3″	3-1/2″	4″
1000	20.7634	5.6765	1.4519	0.4328	0.1043	0.0228	0.0053	1.2929	0.3307	0.1026	0.0271	0.0129	0.0038	0.0016	0.0006	0.0003	0.0002
1050	22.8209	6.2619	1.6042	0.4760	0.1154	0.0252	0.0059	1.4149	0.3619	0.1123	0.0297	0.0141	0.0042	0.0018	0.0006	0.0003	0.000
1100	24.9723	6.8762	1.7642	0.5212	0.1271	0.0276	0.0065	1.5419	0.3944	0.1223	0.0324	0.0153	0.0046	0.0019	0.0007	0.0003	0.0002
1150	27.2172	7.5194	1.9321	0.5683	0.1394	0.0303	0.0071	1.6740	0.4281	0.1328	0.0351	0.0166	0.0050	0.0021	0.0007	0.0004	0.0002
1200	29.5555	8.1915	2.1078	0.6175	0.1522	0.0330	0.0078	1.8110	0.4632	0.1437	0.0380	0.0180	0.0054	0.0023	0.0008	0.0004	0.0002
1250	31.9869	8.8925	2.2912	0.6687	0.1657	0.0358	0.0085	1.9529	0.4995	0.1549	0.0410	0.0194	0.0058	0.0024	0.0009	0.0004	0.0002
1300	34.5111	9.6225	2.4825	0.7219	0.1798	0.0388	0.0092	2.0998	0.5370	0.1666	0.0441	0.0209	0.0062	0.0026	0.0009	0.0005	0.0002
1350	37.1279	10.3815	2.6817	0.7770	0.1944	0.0419	0.0100	2.2515	0.5758	0.1786	0.0473	0.0224	0.0067	0.0028	0.0010	0.0005	0.0003
1400	39.8370	11.1694	2.8887	0.8341	0.2097	0.0451	0.0108	2.4080	0.6159	0.1910	0.0505	0.0239	0.0071	0.0030	0.0011	0.0005	0.0003
1450	42.6383	11.9864	3.1036	0.8932	0.2255	0.0484	0.0117	2.5694	0.6571	0.2038	0.0539	0.0255	0.0076	0.0032	0.0011	0.0006	0.0003
1500	45.5316	12.8323	3.3264	0.9542	0.2420	0.0519	0.0125	2.7356	0.6996	0.2170	0.0574	0.0272	0.0081	0.0034	0.0012	0.0006	0.0003
1550	48.5167	13.7072	3.5570	1.0172	0.2590	0.0554	0.0134	2.9065	0.7434	0.2306	0.0610	0.0289	0.0086	0.0036	0.0013	0.0006	0.0003
1600	51.5933	14.6112	3.7956	1.0822	0.2767	0.0591	0.0144	3.0822	0.7883	0.2445	0.0647	0.0306	0.0091	0.0039	0.0013	0.0007	0.0004
1650	54.7613	15.5442	4.0421	1.1491	0.2949	0.0629	0.0153	3.2626	0.8344	0.2588	0.0685	0.0324	0.0097	0.0041	0.0014	0.0007	0.0004
1700	58.0205	16.5063	4.2965	1.2180	0.3138	0.0669	0.0163	3.4476	0.8818	0.2735	0.0724	0.0343	0.0102	0.0043	0.0015	0.0007	0.0004
1750	61.3707	17.4974	4.5588	1.2888	0.3333	0.0709	0.0174	3.6374	0.9303	0.2886	0.0763	0.0362	0.0108	0.0045	0.0016	0.0008	0.0004
1800	64.8119	18.5176	4.8291	1.3616	0.3533	0.0751	0.0184	3.8318	0.9800	0.3040	0.0804	0.0381	0.0113	0.0048	0.0017	0.0008	0.0004
1850	68.3437	19.5668	5.1074	1.4364	0.3740	0.0794	0.0195	4.0309	1.0309	0.3198	0.0846	0.0401	0.0119	0.0050	0.0018	00.0009	0.0005
1900	71.9660	20.6452	5.3936	1.5130	0.3953	0.0838	0.0207	4.2346	1.0830	0.3360	0.0889	0.0421	0.0125	0.0053	0.0018	0.0009	0.0005
1950	75.6788	21.7526	5.6878	1.5917	0.4172	0.0883	0.0219	4.4429	1.1363	0.3525	0.0933	0.0442	0.0132	0.0056	0.0019	0.0010	0.0005
2000	79.4818	22.8891	5.9900	1.6722	0.4398	0.0930	0.0231	4.6557	1.1907	0.3694	0.0977	0.0463	0.0138	0.0058	0.0020	0.0010	0.0005
2100	87.3580	25.2496	6.6184	1.8391	0.4867	0.1026	0.0256	5.0951	1.3031	0.4042	0.1069	0.0507	0.0151	00.0064	0.0022	0.0011	0.0006
2200	95.5935	27.7265	7.2788	2.0138	0.5360	0.1128	0.0282	5.5526	1.4201	0.4405	0.1165	0.0552	0.0164	0.0069	0.0024	0.0012	0.0006
2300	104.1872	30.3200	7.9714	2.1962	0.5878	0.1234	0.0310	6.0281	1.5417	0.4783	0.1265	0.0599	0.0178	0.0075	0.0026	0.0013	0.0007
2400	113.1381	33.0301	8.6961	2.3862	0.6422	0.1346	0.0339	6.5215	1.6679	0.5174	0.1369	0.0648	0.0193	0.0082	0.0028	0.0014	0.0008
2500	122.4453	35.8569	9.4531	2.5839	0.6990	0.1462	0.0370	7.0326	1.7986	0.5580	0.1476	0.0699	0.0208	0.0088	0.0031	0.0015	0.0008
2600	132.1079	38.8004	10.2424	2.7893	0.7583	0.1583	0.0402	07.5614	1.9339	0.5999	0.1587	0.0752	0.0224	0.0095	0.0033	0.0016	0.0009
2700	142.124	41.8608	11.0640	3.0024	0.8201	0.1709	0.0436	8.1077	2.0736	0.6432	0.1702	0.0806	0.0240	0.0101	0.0035	0.0017	0.0009
2800	152.4955	45.0380	11.9181	3.2230	0.8844	0.1840	0.0471	8.6715	2.2178	0.6880	0.1820	0.0862	0.0257	0.0108	0.0038	0.0019	0.0010
2900	163.2190	48.3321	12.8047	3.4513	0.9513	0.1975	0.0507	9.2526	2.3664	0.7341	0.1942	0.0920	0.0274	0.0116	0.0040	0.0020	0.0011
3000	174.2944	51.7431	13.7237	3.6872	1.0207	0.2116	0.0545	9.8510	2.5195	0.7816	0.2068	0.0979	0.0292	0.0123	0.0043	0.0021	0.0012
3100	185.7211	55.2712	14.6754	3.9307	1.0926	0.2262	0.0584	10.4665	2.6769	0.8304	0.2197	0.1040	0.0310	0.0131	0.0046	0.0023	0.0012
3200	197.4984	58.9162	15.6596	4.1818	1.1671	0.2412	0.0625	11.0991	2.8387	0.8806	0.2330	0.1103	0.0329	0.0139	0.0048	0.0024	0.0013
3300	209.6254	62.6784	16.6765	4.4404	1.2441	0.2567	0.0667	11.7487	3.0048	0.9321	0.2466	0.1168	0.0348	0.0147	0.0051	0.0025	0.0014
3400	222.1016	66.5576	17.7262	4.7066	1.3236	0.2728	0.0711	12.4152	3.1753	0.9850	0.2606	0.1234	0.0367	0.0155	0.0054	0.0027	0.0015
3500	234.9263	70.5541	18.8086	4.9803	1.4058	0.2893	0.0756	13.0986	3.3501	1.0392	0.2749	0.1302	0.0388	0.0164	0.0057	0.0028	0.0015
3600	248.0988	74.6677	19.9237	5.2616	1.4905	0.3063	0.0802	13.7988	3.5291	1.0948	0.2896	0.1372	0.0408	0.0173	0.0060	0.0030	0.0016
3700	261.6186	78.8985	21.0718	5.5503	1.5777	0.3238	0.0850	14.5156	3.7125	1.1516	0.3047	0.1443	0.0430	0.0182	0.0063	0.0031	0.0017
3800	275.4850	83.2467	22.2526	5.8466	1.6676	0.3418	0.0900	15.2491	3.9001	1.2098	0.3201	0.1516	0.0451	0.0191	0.0067	0.0033	0.0018
3900	289.6974	87.7121	23.4665	6.1504	1.7600	0.3603	0.0951	15.9991	4.0919	1.2693	0.3358	0.1590	0.0474	0.0200	0.0070	0.0034	0.0019
4000	304.2552	092.2949	24.7132	6.4617	1.8550	0.3793	0.1003	16.7656	4.2879	1.3301	0.3519	0.1667	0.0496	0.0210	0.0073	0.0036	0.0020
4100	319.1580	96.9951	25.9930	6.7805	1.9526	0.3988	0.1057	17.5486	4.4882	13923	0.3683	0.1744	0.0519	0.0219	0.0077	0.0038	0.0021
4200	334.4051	101.8127	27.3058	7.1067	2.0528	0.4188	0.1113	18.3479	4.6926	1.4557	0.3851	0.1824	0.0543	0.0229	0.0080	0.0040	0.0021
4300	349.9961	106.7478	28.6516	7.4405	2.1556	0.4392	0.1170	19.1635	4.9012	1.5204	0.4022	0.1905	0.0567	0.0240	0.0084	0.0041	0.0022
4400	365.9304	111.8003	30.0305	7.7816	2.2610	0.4602	0.1228	19.9954	5.1140	1.5864	0.4197	00.1988	0.0592	0.0250	0.0087	0.0043	0.0023
4500	382.2076	116.9703	31.4426	8.1302	2.3690	0.4817	0.1288	20.843	5.3309	1.6537	0.4375	0.2072	0.0617	0.0261	0.0091	0.0045	0.0024
4600	398.8270	122.2579	32.8879	8.4863	2.4796	0.5036	0.1350	21.7078	5.5519	1.7222	0.4556	0.2158	0.0643	0.0271	0.0095	0.0047	0.0025
4700	415.7884	127.6630	34.3663	8.8498	2.5929	0.5261	0.1413	22.5881	5.7771	1.7921	0.4741	0.2245	0.0669	0.0282	0.0099	0.0049	0.0026
4800	433.0911	133.1858	35.8780	9.2207	2.7087	0.5490	0.1477	23.4844	6.0063	1.8632	0.4929	0.2335	0.0695	0.0294	0.0102	0.0051	0.0027
4900	450.7348	138.8262	37.4229	9.5990	2.8272	0.5725	0.1543	24.3968	6.2397	1.9356	0.5121	0.2425	0.0722	0.0305	0.0106	0.0053	0.0029

CHAPTER 7 "INSPECTION, TESTING AND PURGING" OF THE NATIONAL GAS CODE, NFPA 54, ANSI Z223.1 In CANADA, refer to the applicable sections of the CAN/CGA B149 Installation codes.

National Fuel Gas Code

CHAPTER 4
Inspection, Testing and Purging

7.1 Pressure Testing and Inspection.

7.1.1* General.

7.1.1.1 Prior to acceptance and initial operation, all piping installations shall be inspected and pressure tested to determine that the materials, design, fabrication, and installation practices comply with the requirements of this code.

7.1.1.2 Inspection shall consist of visual examination, during or after manufacture, fabrication, assembly, or pressure tests as appropriate. Supplementary types of non-destructive inspection techniques, such as magnetic-particle, radiographic, and ultrasonic, shall not be required unless specifically listed herein or in the engineering design.

7.1.1.3 Where repairs or additions are made following the pressure test, the affected piping shall be tested. Minor repairs and additions are not required to be pressure tested provided that the work is inspected and connections are tested with a non-corrosive leak-detecting fluid or other leak-detecting fluid or other leak-detecting methods approved by the authority having jurisdiction.

7.1.1.4 Where new branches are installed from the point of delivery to new appliance(s), only the newly installed branch(es) shall be required to be pressure tested. Connections between the new piping and the existing piping shall be tested with a non-corrosive leak-detecting fluid or approved leak-detecting methods.

7.1.1.5 A piping system shall be tested as a complete unit or in sections. Under no circumstances shall a valve in a line be used as a bulkhead between gas in one section of the piping system and test medium in an adjacent section, unless two valves are installed in series with a valved "tell tale" located between these valves. A valve shall not be subjected test pressure unless it can be determined that the valve, including the valve closing mechanism, is designed to safely withstand the pressure.

7.1.1.6 Regulator and valve assemblies fabricated independently of the piping system in which they are to be installed shall be permitted to be tested with inert gas or air at the time of fabrication

7.1.2 Test Medium.

The test medium shall be air, nitrogen, carbon dioxide or an inert gas. OXYGEN SHALL NEVER BE USED.

7.1.3 Test Preparation.

7.1.3.1 Pipe joints, including welds, shall be left exposed for examination during the test.

Exception: If the pipe end joints have been previously tested in accordance with this code, they shall be permitted to be covered or concealed.

7.1.3.2 Expansion joints shall be provided with temporary restraints, if required, for the additional thrust load under test.

7.1.3.3 Appliances and equipment that is not to be included in the test shall be either disconnected from the piping or isolated by blanks, blind flanges, or caps. Flanged joints at which blinds are inserted to blank off other equipment during the test shall not be required to be tested.

7.1.3.4 Where the piping system is connected to appliances, equipment or equipment components designed for operating pressures of less than the test pressure, such appliances, equipment or equipment components shall be isolated from the piping system by disconnecting them and capping the outlet(s).

7.1.3.5 Where the piping system is connected to appliances, equipment, or equipment components designed for operating pressures equal to or greater than the test pressure, such appliances and equipment shall be isolated from the piping system by closing the individual equipment shutoff valve(s).

7.1.3.6 All testing of piping systems shall be done with due regard for the safety of employees and the public during the test. Bulkheads, anchorage and bracing suitably designed to resist test pressures shall be installed if necessary. Prior to testing, the interior of the pipe shall be cleared of all foreign material.

7.1.4 Test Pressure.

7.1.4.1 Test pressure shall be measured with a manometer or with a pressure measuring device designed and calibrated to read, record, or indicate a pressure loss due to leakage during the test period. The source of pressure shall be isolated before the pressure tests are made. Mechanical gauges used to measure test pressures shall have a range such that the highest end of the scale is not greater than 5 times the test pressure.

7.1.4.2 The test pressure to be used shall be no less than 1 1/2 times the proposed maximum working pressure, but not less than 3 psi (20 kPa), irrespective of design pressure. Where the test pressure exceeds 125 psi (862 kPa), the test pressure shall not exceed a value that produces a hoop stress in the piping greater than 50 percent of the specified minimum yield strength of the pipe.

7.1.4.3 Test Duration Test duration shall not be less than 1/2 hour for each 500 cubic feet (14 m^3) of pipe volume or fraction thereof. When testing a system having a volume less than 10 cubic feet (0.28m^3) or a system in a single-family dwelling, the test duration shall be permitted to be reduced to 10 minutes. For piping systems having a volume of more than 24,000 cubic feet (680 m^3), the duration of the test shall not be required to exceed 24 hours.

7.1.5 Detection of Leaks and Defects.

7.1.5.1 The piping system shall withstand the test pressure specified without showing any evidence of leakage or other defects. Any reduction of test pressures as indicated by pressure gages shall be deemed to indicate the presence of a leak unless such reduction can be readily attributed to some other cause.

7.1.5.2 The leakage shall be located by means of an approved gas detector, a non-corrosive leak detection fluid, or other approved leak detection methods. ***Matches, candles, open flames, or other methods that provide a source of ignition shall not be used.***

7.1.5.3 Where leakage or other defects are located, the affected portion of the piping system shall be repaired or replaced and retested. *(See General 7.1.1.3).*

7.2 System and Equipment Leakage Test.

7.2.1 Test Gasses. Fuel gas shall be permitted to be used for leak checks in piping systems that have been tested in accordance with Section 7.1.

7.2.2 Before Turning Gas On. Before gas is introduced into a system of new gas piping, the entire system shall be inspected to determine that there are no open fittings or ends and that all manual valves at outlets on equipment are closed and all unused valves at outlets are closed and plugged or capped.

7.2.3* Test for Leakage. Immediately after the gas is turned on into a new system or into a system that has been initially restored after an interruption of service, the piping system shall be tested for leakage. If leakage is indicated, the gas supply shall be shut off until the necessary repairs have been made.

7.2.4 Placing Equipment in Operation. Gas utilization equipment shall not be placed in operation until after the piping system has been tested in accordance with 7.2.3 and purged in accordance with 7.3.2.

7.3* Purging.

7.3.1 Removal from Service. When gas piping is to be opened for servicing, addition or modification, the section to be worked on shall be turned off from the gas supply at the nearest convenient point, and the line pressure vented to the outdoors, or to ventilated areas sufficient size to prevent accumulation of flammable mixtures.

If this section exceeds the lengths shown in Table 7.3.1, the remaining gas shall be displaced with an inert gas.

Table 7.3.1 Length of Piping Requiring Purging Before Placing in Operation

For Si units: 1 foot = 0.305 m

Nominal Pipe Size, Inches	Minimum Length of Piping Requiring Purging
2 1/2″	50 feet
3″	30 feet
4″	15 feet
6″	10 feet
8″ or Larger	Any Length

7.3.2 Placing in Operation

When piping full of air is placed in operation, the air in the piping shall be displaced with fuel gas, except where such piping is required by Table 7.3.2 to be purged with an inert gas prior to introduction of fuel gas. The air can be safely displaced with fuel gas provided that a moderately rapid and continuous flow of fuel gas is introduced at one end of the line and air is vented out at the other end. The fuel gas flow shall be continued without interruption until the vented gas is free of air. The point of discharge shall not be left unattended during purging. After purging, the vent shall then be closed. Where required by Table 7.3.2, the air in the piping shall first be displaced with an inert gas, and the inert gas shall be displaced with fuel gas.

Table 7.3.2 Length of Piping Requiring Purging Before Placing in Operation

For Si units: 1 foot = 0.305 m

Nominal Pipe Size, Inches	Minimum Length of Piping Requiring Purging
3″	30 feet
4″	15 feet
6″	10 feet
8″ or Larger	Any Length

7.3.3 Discharge of Purged Gases.

The open end of piping systems being purged shall not discharge into confined spaces or areas where there are sources of ignition unless precautions are taken to perform this operation in a safe manner by ventilation of the space, control of purging rate, and elimination of all hazardous conditions.

7.3.4 Placing Equipment in Operation.

After the piping has been placed in operation, all equipment shall be purged and then placed in operation, as necessary.

NOTICE An asterisk (*) following the number or letter designating a paragraph indicates that explanatory material on the paragraph can be found in Appendix A of the Natural Fuel Gas Code.

PO BOX 9 | Blossburg, PA 16912
PH: 800-248-1027 | 570-638-2131 | FAX: 570-638-3410

www.wardflex.com

WARDFLEX®

WDFLXINSTALLPAYNE30K0609

WARDFLEX is a registered trademark of Ward Manufactuing, LLC © 2009